SUN2000-(250KTL, 280KTL, 300KTL, 330KTL) Series

User Manual

Issue	27
Date	2026-09-30

HUAWEI TECHNOLOGIES CO., LTD.

Copyright © Huawei Technologies Co., Ltd. 2026. All rights reserved.

No part of this document may be reproduced or transmitted in any form or by any means without prior written consent of Huawei Technologies Co., Ltd.

Trademarks and Permissions

HUAWEI and other Huawei trademarks are trademarks of Huawei Technologies Co., Ltd.
All other trademarks and trade names mentioned in this document are the property of their respective holders.

Notice

The purchased products, services and features are stipulated by the contract made between Huawei and the customer. All or part of the products, services and features described in this document may not be within the purchase scope or the usage scope. Unless otherwise specified in the contract, all statements, information, and recommendations in this document are provided "AS IS" without warranties, guarantees or representations of any kind, either express or implied.

The information in this document is subject to change without notice. Every effort has been made in the preparation of this document to ensure accuracy of the contents, but all statements, information, and recommendations in this document do not constitute a warranty of any kind, express or implied.

Huawei Technologies Co., Ltd.

Address: Huawei Industrial Base
Bantian, Longgang
Shenzhen 518129
People's Republic of China

Website: https://e.huawei.com

About This Document

Purpose

This document describes the installation, commissioning, maintenance, and troubleshooting of the SUN2000-250KTL-H1, SUN2000-250KTL-H3, SUN2000-280KTL-H0, SUN2000-300KTL-H0, SUN2000-330KTL-H1 and SUN2000-330KTL-H2 (SUN2000 for short). Before installing and operating the inverter, ensure that you are familiar with the features, functions, and safety precautions provided in this document.

Figures provided in this document are for reference only.

Intended Audience

This document is intended for photovoltaic (PV) plant operators and qualified electricians.

Symbol Conventions

The symbols that may be found in this document are defined as follows.

Symbol	Description
DANGER	Indicates a hazard with a high level of risk which, if not avoided, will result in death or serious injury.
WARNING	Indicates a hazard with a medium level of risk which, if not avoided, could result in death or serious injury.
CAUTION	Indicates a hazard with a low level of risk which, if not avoided, could result in minor or moderate injury.
NOTICE	Indicates a potentially hazardous situation which, if not avoided, could result in equipment damage, data loss, performance deterioration, or unanticipated results. NOTICE is used to address practices not related to personal injury.

 Copyright © Huawei Technologies Co., Ltd.

Symbol	Description
NOTE	Supplements the important information in the main text. NOTE is used to address information not related to personal injury, equipment damage, and environment deterioration.

Change History

Changes between document issues are cumulative. The latest document issue contains all the changes made in earlier issues.

Issue 27 (2026-09-30)

Updated **B Grid Codes**.

Issue 26 (2026-08-30)

Updated **1.3 Environment Requirements**.

Updated **4.2.1 Site Selection Requirements**.

Issue 25 (2026-06-30)

Updated **1.1 Personal Safety**.

Updated **4.6 Installing the SUN2000 on a Support**.

Updated **4.7 Installing the SUN2000 on a Pole Clamp**.

Updated **8 System Maintenance**.

Updated **8.3 Power-Off for Maintenance**.

Updated **B Grid Codes**.

Issue 24 (2026-04-15)

Updated **8.7 Locating Insulation Resistance Faults**.

Issue 23 (2026-03-30)

Updated **1.2 Electrical Safety**.

Updated **7.4 Commissioning the Inverter (Using the App)**.

Updated **8.7 Locating Insulation Resistance Faults**.

Updated **C Resetting Passwords**.

Deleted "Domain Name List of Management Systems."

 Copyright © Huawei Technologies Co., Ltd.

Issue 22 (2025-12-30)

Updated **2.2 Networking Application**.

Updated **2.3 Appearance**.

Updated **4.2.1 Site Selection Requirements**.

Updated **B Grid Codes**.

Deleted the content about upgrading the inverter using a USB flash drive.

Issue 21 (2025-10-30)

Updated **3 Storage Requirements**.

Updated **4.2.1 Site Selection Requirements**.

Updated **4.2.2 Clearance Requirements**.

Updated **7.1 Powering On the Inverter**.

Updated **10 Technical Specifications**.

Issue 20 (2025-08-29)

Updated **4.2.3 Angle Requirements**.

Updated **5.4 Connecting an AC Output Power Cable**.

Updated **5.6 Connecting DC Input Power Cables**.

Issue 19 (2025-06-20)

Updated **3 Storage Requirements**.

Updated **4.7 Installing the SUN2000 on a Pole Clamp**.

Updated **5.6 Connecting DC Input Power Cables**.

Updated **B Grid Codes**.

Issue 18 (2025-03-30)

Updated **2.3 Appearance**.

Updated **10 Technical Specifications**.

Updated **B Grid Codes**.

Issue 17 (2025-01-30)

Updated **5.6 Connecting DC Input Power Cables**.

Updated **7.1 Powering On the Inverter**.

Updated **8.3 Power-Off for Maintenance**.

Updated **10 Technical Specifications**.

Issue 16 (2024-11-30)

Updated **2.3 Appearance**.

Updated **4.2.1 Site Selection Requirements**.

Updated **7.1 Powering On the Inverter**.

Issue 15 (2024-10-30)

Updated **10 Technical Specifications**.

Updated **B Grid Codes**.

Issue 14 (2024-08-22)

Updated **10 Technical Specifications**.

Issue 13 (2024-06-30)

Updated **7.1 Powering On the Inverter**.

Issue 12 (2024-03-20)

Updated **2.4 Circuit Diagram**.

Updated **2.6 Label Description**.

Updated the content about upgrading the inverter using a USB flash drive.

Updated **8.7 Locating Insulation Resistance Faults**.

Updated **B Grid Codes**.

Issue 11 (2024-01-30)

Updated **2.1 Model Number Description**.

Updated **2.6 Label Description**.

Updated **3 Storage Requirements**.

Updated **4.2.1 Site Selection Requirements**.

Updated **4.2.2 Clearance Requirements**.

Updated **5.2 Preparing Cables**.

Updated **5.4 Connecting an AC Output Power Cable**.

Issue 10 (2023-12-20)

Updated **2.2 Networking Application**.

Updated **2.3 Appearance**.

Updated **5.2 Preparing Cables**.

Updated **7.1 Powering On the Inverter**.

 Copyright © Huawei Technologies Co., Ltd.

Updated **8.6 Resetting and Turning On the DC SWITCH**.

Updated **9 Alarm Reference**.

Issue 09 (2023-10-30)

Updated **4.2.1 Site Selection Requirements**.

Updated **4.5 Moving the SUN2000**.

Updated **5.1 Precautions**.

Updated **5.3 Connecting a PE Cable**.

Updated **5.6 Connecting DC Input Power Cables**.

Updated **9 Alarm Reference**.

Updated **C Resetting Passwords**.

Issue 08 (2023-08-20)

Updated **4.2.1 Site Selection Requirements**.

Updated **10 Technical Specifications**.

Issue 07 (2023-06-30)

Updated **4.3 Preparing Tools**.

Updated **5.6 Connecting DC Input Power Cables**.

Updated **7 Power-On and Commissioning**.

Updated **8.1 Routine Maintenance**.

Added **8.7 Locating Insulation Resistance Faults**.

Updated **9 Alarm Reference**.

Adjusted the document structure.

Issue 06 (2023-05-12)

Updated **5.2 Preparing Cables**.

Added **5.5 Requirements for AC Power Cable Stripping Outside the Compartment**.

Issue 05 (2023-05-09)

Updated **2.2 Networking Application**.

Updated **5.2 Preparing Cables**.

Updated **5.6 Connecting DC Input Power Cables**.

Updated **8.3 Power-Off for Maintenance**.

Updated **9 Alarm Reference**.

Issue 04 (2023-03-30)

Updated **2.2 Networking Application**.

Updated **5.4 Connecting an AC Output Power Cable**.

Updated **5.6 Connecting DC Input Power Cables**.

Issue 03 (2023-02-10)

Updated **2.2 Networking Application**.

Updated **4.2 Installation Requirements**.

Updated **5.2 Preparing Cables**.

Updated **5.4 Connecting an AC Output Power Cable**.

Updated **7.1 Powering On the Inverter**.

Updated **9 Alarm Reference**.

Updated **F Acronyms and Abbreviations**.

Issue 02 (2022-12-20)

Added the SUN2000-250KTL-H1, SUN2000-250KTL-H3, SUN2000-330KTL-H1, and SUN2000-330KTL-H2 models.

Updated **2.1 Model Number Description**.

Updated **4.2 Installation Requirements**.

Updated **5.2 Preparing Cables**.

Updated **7 Power-On and Commissioning**.

Updated **9 Alarm Reference**.

Updated **10 Technical Specifications**.

Updated **B Grid Codes**.

Updated **D Contact Information**.

Issue 01 (2022-10-09)

This issue is used for first office application (FOA).

 Copyright © Huawei Technologies Co., Ltd.

Contents

About This Document ii

1 Safety Information 1

1.1 Personal Safety 2
1.2 Electrical Safety 4
1.3 Environment Requirements 7
1.4 Mechanical Safety 9

2 Overview 14

2.1 Model Number Description 14
2.2 Networking Application 15
2.3 Appearance 19
2.4 Circuit Diagram 23
2.5 Working Modes 23
2.6 Label Description 25

3 Storage Requirements 27

4 Installation 29

4.1 Installation Modes 29
4.2 Installation Requirements 29
4.2.1 Site Selection Requirements 29
4.2.2 Clearance Requirements 33
4.2.3 Angle Requirements 36
4.3 Preparing Tools 37
4.4 Check Before Installation 40
4.5 Moving the SUN2000 40
4.6 Installing the SUN2000 on a Support 42
4.7 Installing the SUN2000 on a Pole Clamp 44

5 Electrical Connections 45

5.1 Precautions 45
5.2 Preparing Cables 47
5.3 Connecting a PE Cable 51
5.4 Connecting an AC Output Power Cable 51
5.5 Requirements for AC Power Cable Stripping Outside the Compartment 57

 Copyright © Huawei Technologies Co., Ltd.

5.6 Connecting DC Input Power Cables....60
5.7 Connecting Signal Cables....66
6 Check Before Power-On....68
7 Power-On and Commissioning....69
7.1 Powering On the Inverter....69
7.2 Commissioning Methods and Process....71
7.3 Commissioning the Inverter (Using the SmartLogger)....72
7.3.1 Preparations and SmartLogger WebUI Login....72
7.3.2 Software Upgrade....72
7.3.3 Commissioning Using Deployment Wizard....72
7.3.4 Parameters Settings....76
7.4 Commissioning the Inverter (Using the App)....77
8 System Maintenance....78
8.1 Routine Maintenance....78
8.2 Shutdown and Power-Off....81
8.3 Power-Off for Maintenance....81
8.4 Replacing a Fan....83
8.5 Replacing the SUN2000....87
8.6 Resetting and Turning On the DC SWITCH....88
8.7 Locating Insulation Resistance Faults....88
8.8 Insulation Resistance Inspection During Reactive Power Output at Night....91
9 Alarm Reference....92
10 Technical Specifications....93
A Crimping an OT or DT Terminal....99
B Grid Codes....102
C Resetting Passwords....116
D Contact Information....118
E Digital Power Customer Service....120
F Acronyms and Abbreviations....121

1 Safety Information

Statement

Before transporting, storing, installing, operating, using, and/or maintaining the equipment, read this document, strictly follow the instructions provided herein, and follow all the safety instructions on the equipment and in this document. In this document, "equipment" refers to the products, software, components, spare parts, and/or services related to this document; "the Company" refers to the manufacturer (producer), seller, and/or service provider of the equipment; "you" refers to the entity that transports, stores, installs, operates, uses, and/or maintains the equipment.

The **DANGER**, **WARNING**, **CAUTION**, and **NOTICE** statements described in this document do not cover all the safety precautions. You also need to comply with relevant international, national, or regional standards and industry practices. **The Company shall not be liable for any consequences that may arise due to violations of safety requirements or safety standards concerning the design, production, and usage of the equipment.**

The equipment shall be used in an environment that meets the design specifications. Otherwise, the equipment may be faulty, malfunctioning, or damaged, which is not covered under the warranty. The Company shall not be liable for any property loss, personal injury, or even death caused thereby.

Comply with applicable laws, regulations, standards, and specifications during transportation, storage, installation, operation, use, and maintenance.

Do not perform reverse engineering, decompilation, disassembly, adaptation, implantation, or other derivative operations on the equipment software. Do not study the internal implementation logic of the equipment, obtain the source code of the equipment software, violate intellectual property rights, or disclose any of the performance test results of the equipment software.

The Company shall not be liable for any of the following circumstances or their consequences:

- Equipment damage due to force majeure such as earthquakes, floods, volcanic eruptions, debris flows, lightning strikes, fires, wars, armed conflicts, typhoons, hurricanes, tornadoes, and other extreme weather conditions
- Operation beyond the conditions specified in this document

 Copyright © Huawei Technologies Co., Ltd.

- Installation or use in environments that do not comply with international, national, or regional standards
- Installation or use by unqualified personnel
- Failure to follow the operation instructions or safety precautions on the product or in this document
- Unauthorized modifications to the product or software code or removal of the product
- Damage caused during transportation by you or a third party authorized by you
- Storage conditions that do not meet the requirements specified in this document
- Failure to comply with local laws, regulations, or related standards due to the materials and tools prepared by you
- Damage caused by your or a third party's negligence, intentional breach, gross negligence, or improper operations or damage not caused by the Company

1.1 Personal Safety

DANGER

Ensure that power is off during installation. Do not install or remove a cable with power on. Transient contact between the core of the cable and the conductor will generate electric arcs or sparks, which may cause a fire or personal injury.

DANGER

Non-standard and improper operations on the energized equipment may cause fire, electric shocks, or explosion, resulting in property damage, personal injury, or even death.

DANGER

Before operations, remove conductive objects such as watches, bracelets, bangles, rings, and necklaces to prevent electric shocks.

DANGER

During operations, use dedicated insulated tools to prevent electric shocks or short circuits. The dielectric withstanding voltage level must comply with local laws, regulations, standards, and specifications.

 Copyright © Huawei Technologies Co., Ltd.

DANGER

In rare fault scenarios, flammable gas mixtures may be generated inside the product. In this condition, operating a switch may cause the product to catch fire or allow a serious fault to propagate.

WARNING

During operations, wear personal protective equipment such as protective clothing, insulated shoes, goggles, safety helmets, and insulated gloves.

Figure 1-1 Personal protective equipment

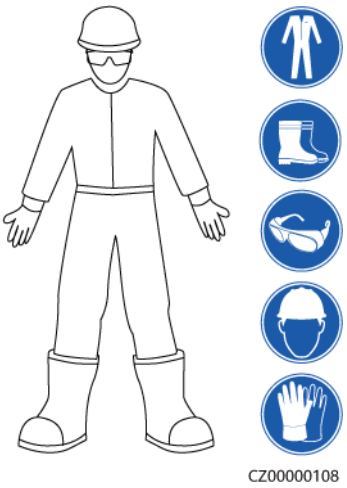

General Requirements

- Do not stop protective devices. Pay attention to the warnings, cautions, and related precautionary measures in this document and on the equipment.
- If there is a likelihood of personal injury or equipment damage during operations, immediately stop, report the case to the supervisor, and take feasible protective measures.
- Do not power on the equipment before it is installed or confirmed by professionals.
- Do not touch the power supply equipment directly or with conductors such as damp objects. Before touching any conductor surface or terminal, measure the voltage at the contact point to ensure that there is no risk of electric shock.
- Do not touch operating equipment because the enclosure is hot.
- Do not touch a running fan with your hands, components, screws, tools, or boards. Otherwise, personal injury or equipment damage may occur.
- In the case of a fire, immediately leave the building or the equipment area and activate the fire alarm or call emergency services. Do not enter the affected building or equipment area under any circumstances.

 Copyright © Huawei Technologies Co., Ltd.

Personnel Requirements

- Only professionals and trained personnel are allowed to operate the equipment.
  - Professionals: personnel who are familiar with the working principles and structure of the equipment, trained or experienced in equipment operations, and fully aware of the sources and degree of various potential hazards in equipment installation, operation, maintenance
  - Trained personnel: personnel who are trained in technology and safety, have required experience, are aware of possible hazards on themselves in certain operations, and are able to take protective measures to minimize the hazards on themselves and other people
- Personnel who plan to install or maintain the equipment must receive adequate training, be able to correctly perform all operations, and understand all necessary safety precautions and local relevant standards.
- Only qualified professionals or trained personnel are allowed to install, operate, and maintain the equipment.
- Only qualified professionals are allowed to remove safety facilities and inspect the equipment.
- Personnel who will perform special tasks such as electrical operations, working at heights, and operations of special equipment must possess the required local qualifications.
- Only authorized professionals are allowed to replace the equipment or components (including software).
- Only personnel who need to work on the equipment are allowed to access the equipment.

1.2 Electrical Safety

DANGER

Before connecting cables, ensure that the equipment is intact. Otherwise, electric shocks or fires may occur.

DANGER

Non-standard and improper operations may result in fire or electric shocks.

DANGER

Prevent foreign matter from entering the equipment during operations. Otherwise, short circuits, equipment damage, load power derating, power failure, or personal injury may occur.

 Copyright © Huawei Technologies Co., Ltd.

WARNING

For the equipment that needs to be grounded, install the ground cable first when installing the equipment and remove the ground cable last when removing the equipment.

WARNING

During the installation of PV strings and the inverter, the positive or negative terminals of PV strings may be short-circuited to ground if the power cables are not properly installed or routed. In this case, an AC or DC short circuit may occur and damage the inverter. The resulting device damage is not covered under any warranty.

CAUTION

Do not route cables near the air intake or exhaust vents of the equipment.

CAUTION

The components (such as power distribution boxes, circuit breakers, and cables) used for electrical connections shall comply with fire resistance and flame retardance standards (such as IEC 60670-1). The materials and structure shall meet fire safety requirements.

General Requirements

- Follow the procedures described in the document for installation, operation, and maintenance. Do not modify, retrofit, or alter the equipment without authorization (including, but not limited to, adding or removing components and cables), and do not change the installation sequence.
- Obtain approval from the national or local electric utility company before connecting the equipment to the grid.
- Observe the power plant safety regulations, such as the operation and work ticket mechanisms.
- Install temporary fences or warning ropes and hang "No Entry" signs around the operation area to keep unauthorized personnel away from the area.
- Before installing or removing power cables, turn off the switches of the equipment and its upstream and downstream switches.
- Before performing operations on the equipment, check that all tools meet the requirements and record the tools. After the operations are complete, collect all of the tools to prevent them from being left inside the equipment.
- Before installing power cables, check that cable labels are correct and cable terminals are insulated.

 Copyright © Huawei Technologies Co., Ltd.

- When installing the equipment, use a torque tool of a proper measurement range to tighten the screws. When using a wrench to tighten the screws, ensure that the wrench does not tilt and the torque error does not exceed 10% of the specified value.
- Ensure that bolts are tightened with a torque tool and marked in red and blue after double-check. Installation personnel mark tightened bolts in blue. Quality inspection personnel confirm that the bolts are tightened and then mark them in red. (The marks must cross the edges of the bolts.)

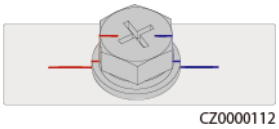

- If the equipment has multiple inputs, disconnect all the inputs and wait until the equipment is completely powered off before performing operations on the equipment.
- Before maintaining a downstream electrical or power distribution device, turn off the output switch on the power supply equipment.
- During equipment maintenance, attach "No switching on" labels near the upstream and downstream switches or circuit breakers as well as warning signs to prevent accidental connection. The equipment can be powered on only after troubleshooting is complete.
- Do not open equipment panels.
- Check equipment connections periodically, ensuring that all screws are securely tightened.
- Only qualified professionals can replace a damaged cable.
- Do not scrawl, damage, or block any labels or nameplates on the equipment. Promptly replace labels that have worn out.
- Do not use solvents such as water, alcohol, or oil to clean electrical components inside or outside of the equipment.

Grounding

- Ensure that the grounding impedance of the equipment complies with local electrical standards.
- Ensure that the equipment is connected permanently to the protective ground. Before operating the equipment, check its electrical connection to ensure that it is reliably grounded.
- Do not operate the equipment in the absence of a properly installed ground conductor.
- Do not damage the ground conductor.

Cabling Requirements

- When selecting, installing, and routing cables, follow local safety regulations and rules.
- When routing power cables, ensure that there is no coiling or twisting. Do not join or weld power cables. If necessary, use a longer cable.
- Ensure that all cables are properly connected and insulated, and meet specifications.

 Copyright © Huawei Technologies Co., Ltd.

- Ensure that the cables are protected from mechanical stress, overheating, and corrosion.
- Ensure that cables are not squeezed, torn, warped, or whitened.
- Ensure that the slots and holes for routing cables are free from sharp edges, and that the positions where cables are routed through pipes or cable holes are equipped with cushion materials to prevent the cables from being damaged by sharp edges or burrs.
- Ensure that cables of the same type are bound together neatly and straight and that the cable sheath is intact. When routing cables of different types, ensure that they are away from each other without entanglement and overlapping.
- Secure buried cables using cable supports and cable clips. Ensure that the cables in the backfill area are in close contact with the ground to prevent cable deformation or damage during backfilling.
- If the external conditions (such as the cable layout or ambient temperature) change, verify the cable usage in accordance with the IEC-60364-5-52 or local laws and regulations. For example, check that the current-carrying capacity meets requirements.
- When routing cables, reserve at least 30 mm clearance between the cables and heat-generating components or areas. This prevents deterioration or damage to the cable insulation layer.

1.3 Environment Requirements

DANGER

Do not expose the equipment to flammable or explosive gas or smoke. Do not perform any operation on the equipment in such environments.

DANGER

Do not store any flammable or explosive materials in the equipment area.

DANGER

Do not place the equipment near heat sources or fire sources, such as smoke, candles, heaters, or other heating devices. Overheating may damage the equipment or cause a fire.

 Copyright © Huawei Technologies Co., Ltd.

WARNING

Install the equipment in an area far away from liquids. Do not install it under areas prone to condensation, such as under water pipes and air exhaust vents, or areas prone to water leakage, such as air conditioner vents, ventilation vents, or feeder windows of the equipment room. Ensure that no liquid enters the equipment to prevent faults or short circuits.

WARNING

To prevent damage or fire due to high temperature, ensure that the ventilation vents or heat dissipation systems are not obstructed or covered by other objects while the equipment is running.

General Requirements

- Store the equipment according to the storage requirements. Equipment damage caused by unqualified storage conditions is not covered under the warranty.
- Keep the installation and operating environments of the equipment within the allowed ranges. Otherwise, its performance and safety will be compromised.
- The operating temperature range provided in the equipment's technical specifications refers to the ambient temperatures in equipment's installation environment.
- Do not install, use, or operate outdoor equipment and cables (including but not limited to moving equipment, operating equipment and cables, inserting connectors to or removing connectors from signal ports connected to outdoor facilities, working at heights, performing outdoor installation, and opening doors) in harsh weather conditions such as lightning, rain, snow, and level 6 or stronger wind.
- Do not install the equipment in an environment with dust, smoke, volatile or corrosive gases, infrared and other radiations, organic solvents, or salty air.
- Do not install the equipment in an environment with conductive metal or magnetic dust.
- Do not install the equipment in an area conducive to the growth of microorganisms such as fungus or mildew.
- Do not install the equipment in an area with strong vibration, noise, or electromagnetic interference. The equipment shall be installed in an environment with a magnetic field strength less than 4 Gauss. If the magnetic field strength is greater than or equal to 4 Gauss, the equipment may fail to work properly. If the magnetic field strength is high, for example, in a smeltery, you are advised to use a gauss meter to measure the magnetic field strength of the equipment installation position when the smelting equipment is running normally.
- Ensure that the site complies with local laws, regulations, and related standards.
- Ensure that the ground in the installation environment is solid, free from spongy or soft soil, and not prone to subsidence. The site must not be located

 Copyright © Huawei Technologies Co., Ltd.

in a low-lying land prone to water or snow accumulation, and the horizontal level of the site must be above the highest water level of that area in history.

- Do not install the equipment in a position that may be submerged in water.
- If the equipment is installed in a place with abundant vegetation, in addition to routine weeding, harden the ground underneath the equipment using cement or gravel (the area shall be greater than or equal to 3 m x 2.5 m).
- Do not install the equipment in salt-affected areas because it may be corroded. If the equipment has to be installed in a salt-affected area, consult the Company. A salt-affected area refers to the region within 500 m of the coast or prone to sea breeze. Regions prone to sea breeze vary with weather conditions (such as typhoons and monsoons) or terrains (such as dams and hills).
- Before opening doors during the installation, operation, and maintenance of the equipment, clean up any water, ice, snow, or other foreign objects on the top of the equipment to prevent foreign objects from falling into the equipment.
- When installing the equipment, ensure that the installation surface is solid enough to bear the weight of the equipment.
- After installing the equipment, remove the packing materials such as cartons, foam, plastics, and cable ties from the equipment area.

1.4 Mechanical Safety

WARNING

Ensure that all necessary tools are ready and inspected by a professional organization. Do not use tools that have signs of scratches or fail to pass the inspection or whose inspection validity period has expired. Ensure that the tools are secure and not overloaded.

WARNING

Do not drill holes into the equipment. Doing so may affect the sealing performance and electromagnetic containment of the equipment and damage components or cables inside. Metal shavings from drilling may short-circuit boards inside the equipment.

General Requirements

- Repaint any paint scratches caused during equipment transportation or installation in a timely manner. Equipment with scratches must not be exposed for an extended period of time.
- Do not perform operations such as arc welding and cutting on the equipment without evaluation by the Company.
- Do not install other devices on the top of the equipment without evaluation by the Company.

 Copyright © Huawei Technologies Co., Ltd.

- When performing operations over the top of the equipment, take measures to protect the equipment against damage.
- Use correct tools and operate them in the correct way.

Moving Heavy Objects

- Be cautious to prevent injury when moving heavy objects.

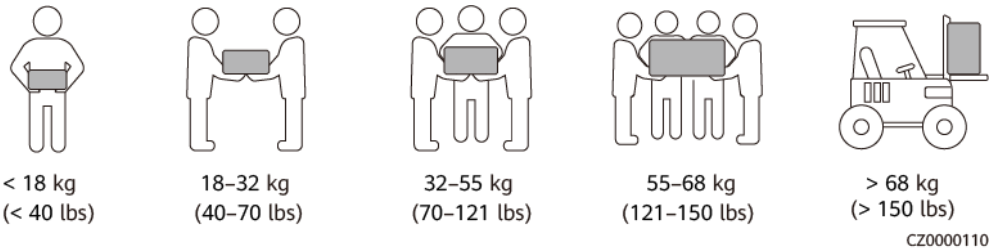

- If multiple persons need to move a heavy object together, determine the manpower and work division with consideration of height and other conditions to ensure that the weight is equally distributed.
- If two persons or more move a heavy object together, ensure that the object is lifted and landed simultaneously and moved at a uniform pace under the supervision of one person.
- Wear personal protective gears such as protective gloves and shoes when manually moving the equipment.
- To move an object by hand, approach to the object, squat down, and then lift the object gently and stably by the force of the legs instead of your back. Do not lift it suddenly or turn your body around.
- Do not quickly lift a heavy object above your waist. Place the object on a workbench that is half-waist high or any other appropriate place, adjust the positions of your palms, and then lift it.
- Move a heavy object stably with balanced force at an even and low speed. Put down the object stably and slowly to prevent any collision or drop from scratching the surface of the equipment or damaging the components and cables.
- When moving a heavy object, be aware of the workbench, slope, staircase, and slippery places. When moving a heavy object through a door, ensure that the door is wide enough to move the object and avoid bumping or injury.
- When transferring a heavy object, move your feet instead of turning your waist around. When lifting and transferring a heavy object, ensure that your feet point to the target direction of movement.
- When transporting the equipment using a pallet truck or forklift, ensure that the tynes are properly positioned so that the equipment does not topple. Before moving the equipment, secure it to the pallet truck or forklift using ropes. When moving the equipment, assign dedicated personnel to take care of it.
- Choose sea, roads in good conditions, or airplanes for transportation. Do not transport the equipment by railway. Avoid tilt or jolt during transportation.

Using Ladders

- Use wooden or insulated ladders when you need to perform live-line working at heights.

 Copyright © Huawei Technologies Co., Ltd.

- Platform ladders with protective rails are preferred. Single ladders are not recommended.
- Before using a ladder, check that it is intact and confirm its load bearing capacity. Do not overload it.
- Ensure that the ladder is securely positioned and held firm.

- When climbing up the ladder, keep your body stable and your center of gravity between the side rails, and do not overreach to the sides.
- When a step ladder is used, ensure that the pull ropes are secured.
- If a single ladder is used, the recommended angle for the ladder against the floor is 75 degrees, as shown in the following figure. A square can be used to measure the angle.

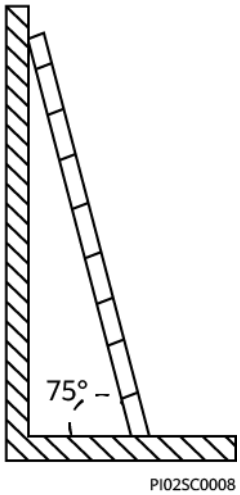

- If a single ladder is used, ensure that the wider end of the ladder is at the bottom, and take protective measures to prevent the ladder from sliding.
- If a single ladder is used, do not climb higher than the fourth rung of the ladder from the top.
- If you use a single ladder to climb up to a platform, ensure that the ladder is at least 1 m higher than the platform.

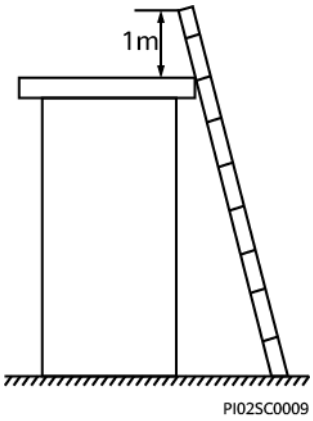

Hoisting

- Only trained and qualified personnel are allowed to perform hoisting operations.
- Install temporary warning signs or fences to isolate the hoisting area.
- Ensure that the foundation where hoisting is performed meets the load-bearing requirements.
- Before hoisting objects, ensure that hoisting tools are firmly secured onto a fixed object or wall that meets the load-bearing requirements.
- During hoisting, do not stand or walk under the crane or the hoisted objects.
- Do not drag steel ropes and hoisting tools or bump the hoisted objects against hard objects during hoisting.
- Ensure that the angle between two hoisting ropes is no more than 90 degrees, as shown in the following figure.

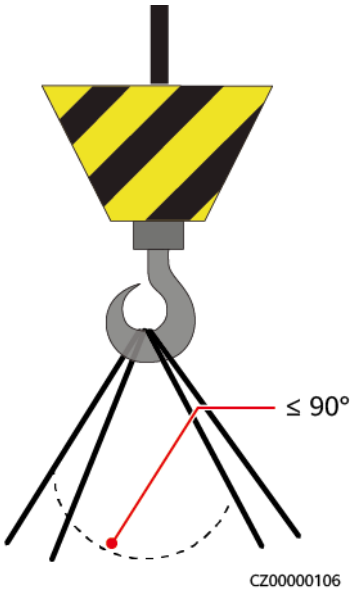

Drilling Holes

- Obtain consent from the customer and contractor before drilling holes.
- Wear protective equipment such as safety goggles and protective gloves when drilling holes.

- To avoid short circuits or other risks, do not drill holes into buried pipes or cables.
- When drilling holes, protect the equipment from shavings. After drilling, clean up any shavings.

 Copyright © Huawei Technologies Co., Ltd.

2 Overview

This product is a three-phase grid-tied PV string inverter. It converts the DC power generated by PV strings into AC power and then feeds the power into the power grid.

2.1 Model Number Description

This document involves the following product models:

- SUN2000-250KTL-H1
- SUN2000-250KTL-H3
- SUN2000-280KTL-H0
- SUN2000-300KTL-H0
- SUN2000-330KTL-H1
- SUN2000-330KTL-H2

Figure 2-1 Model number

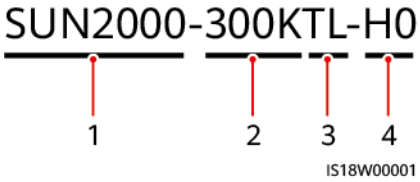

No.	Item	Description
1	Product family identifier	SUN2000: grid-tied solar inverter
2	Power level identifier	250K/280K/300K/330K: power level
3	Topology identifier	TL: transformerless
4	Product series identifier	HX: product series with an input voltage level of 1500 V DC ● 250KTL-H1: a rated power of 250 kW ● 250KTL-H3: a rated power of 250 kW ● 280KTL-H0: a rated power of 280 kW ● 300KTL-H0: a rated power of 300 kW ● 330KTL-H1: a rated power of 300 kW ● 330KTL-H2: a rated power of 275 kW

2.2 Networking Application

Typical Networking

The inverter supports RS485 communication and MBUS communication. In the networking diagram, — indicates the power cable, → indicates the power flow direction, and ∧∧∧ and — indicate the signal flow.

NOTICE

The MBUS communication is applicable to medium-voltage grid connection scenarios and non-low-voltage public grid connection scenarios (industrial environment).

 Copyright © Huawei Technologies Co., Ltd.

Figure 2-2 MBUS networking application (without a SmartMBUS CCO)

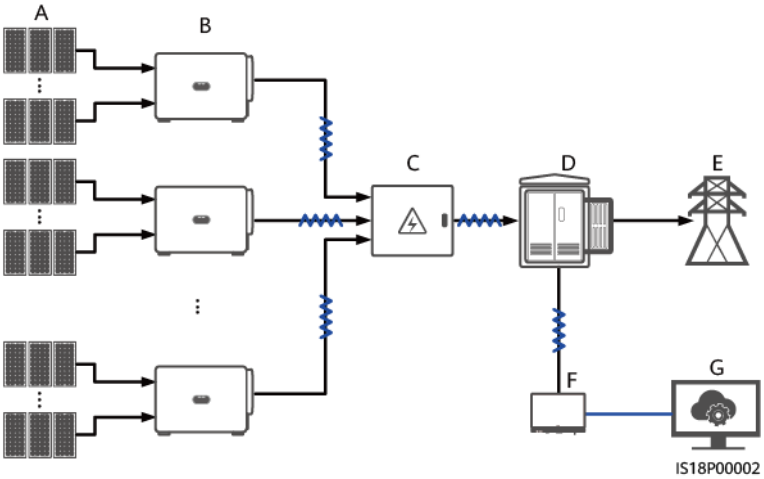

(A) PV strings	(B) Inverters	(C) AC combiner box
(D) Transformer station	(E) Power grid	(F) SmartLogger
(G) Management system	-	-

Figure 2-3 MBUS networking application (double-winding transformer +SmartMBUS CCO)

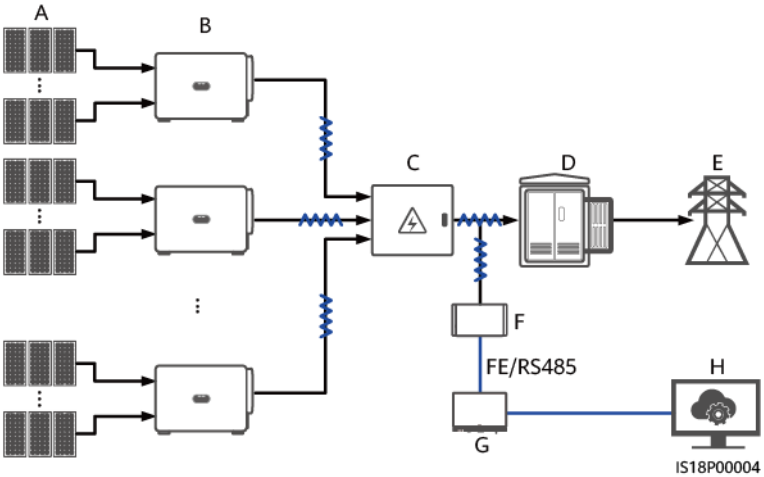

(A) PV strings	(B) Inverters	(C) AC combiner box
(D) Transformer station	(E) Power grid	(F) SmartMBUS CCO01B
(G) SmartLogger	(H) Management system	-

Figure 2-4 MBUS networking application (double-split transformer+SmartMBUS CCO)

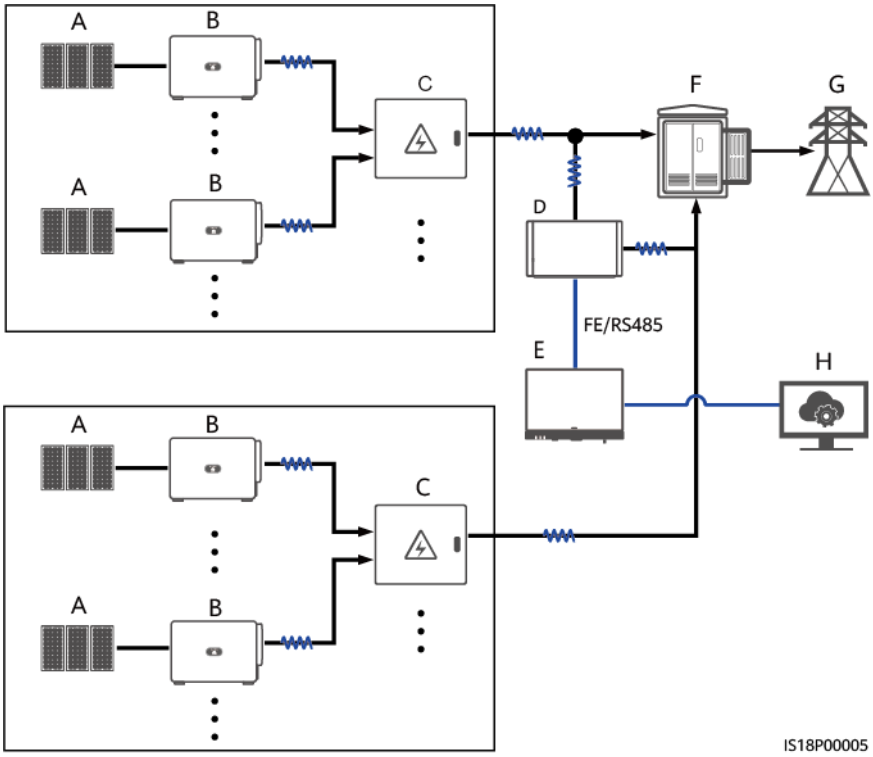

(A) PV strings	(B) Inverters	(C) AC combiner box
(D) SmartMBUS CCO01B	(E) SmartLogger	(F) Transformer station
(G) Power grid	(H) Management system	-

Figure 2-5 RS485 networking application (SmartLogger)

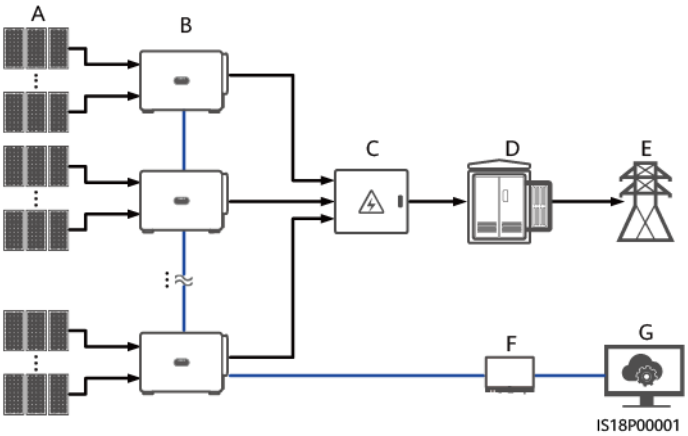

(A) PV strings	(B) Inverters	(C) AC combiner box
(D) Transformer station	(E) Power grid	(F) SmartLogger
(G) Management system	-	-

NOTICE

- To ensure the system response speed, you are advised to connect less than 30 cascaded inverters on each COM port of the SmartLogger.
- If RS485 communication is used, the RS485 communication distance between the inverter at the end and the SmartLogger cannot exceed 1000 m.
- If MBUS communication is used, multi-core cables are recommended and the maximum communication distance is 1000 m. If single-core cables are used, the three-phase cables must be bound at an interval of 1 m (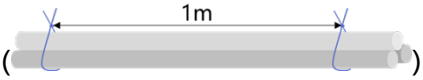

) and the maximum communication distance is 400 m. (When the SmartMBUS CCO01B is configured, the maximum single-core cable communication distance is 750 m, and the distance between the CCO and the busbar sampling cable of the transformer station cannot exceed 3 m.)
- You are advised not to upgrade the software and export logs in fast scheduling scenarios.

NOTE

- The inverter must be connected to a dedicated power transformer and cannot be connected to a low-voltage overhead power cable.
- This device is class A equipment of group 1.
  - Class A equipment: Class A equipment is the equipment suitable for use in all locations other than those allocated to residential environments and those directly connected to a low voltage power supply network which supplies buildings used for domestic purposes.
  - Group 1 equipment: Group 2 contains all industrial, scientific, and medical (ISM) RF equipment in which radio-frequency energy in the frequency range of 9 kHz to 400 GHz is intentionally generated and used or only used locally, in the form of electromagnetic radiation, inductive and/or capacitive coupling, for the treatment of material, for inspection/analysis purposes, or for transfer of electromagnetic energy. Group 1 contains all equipment which is not classified as group 2 equipment.
- The SUN2000-250KTL-H1, SUN2000-250KTL-H3, SUN2000-280KTL-H0, SUN2000-300KTL-H0, SUN2000-330KTL-H1 and SUN2000-330KTL-H2 inverters described in this document must not be connected to a winding (of the transformer station) that has other models of inverters connected to it.

Earthing System

The inverter supports the IT earthing system.

Figure 2-6 Earthing system

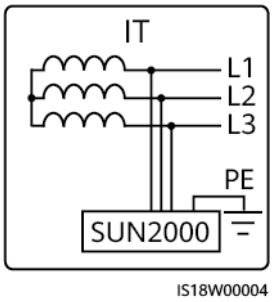

NOTE

The inverter supports the IT earthing system in PV-only scenarios. The use of the inverter in other types of earthing systems, such as TT, TN-C, and TN-C-S, is not recommended. (If such an earthing system is encountered, contact the Company's engineers.)

2.3 Appearance

Appearance and Ports

Figure 2-7 Appearance

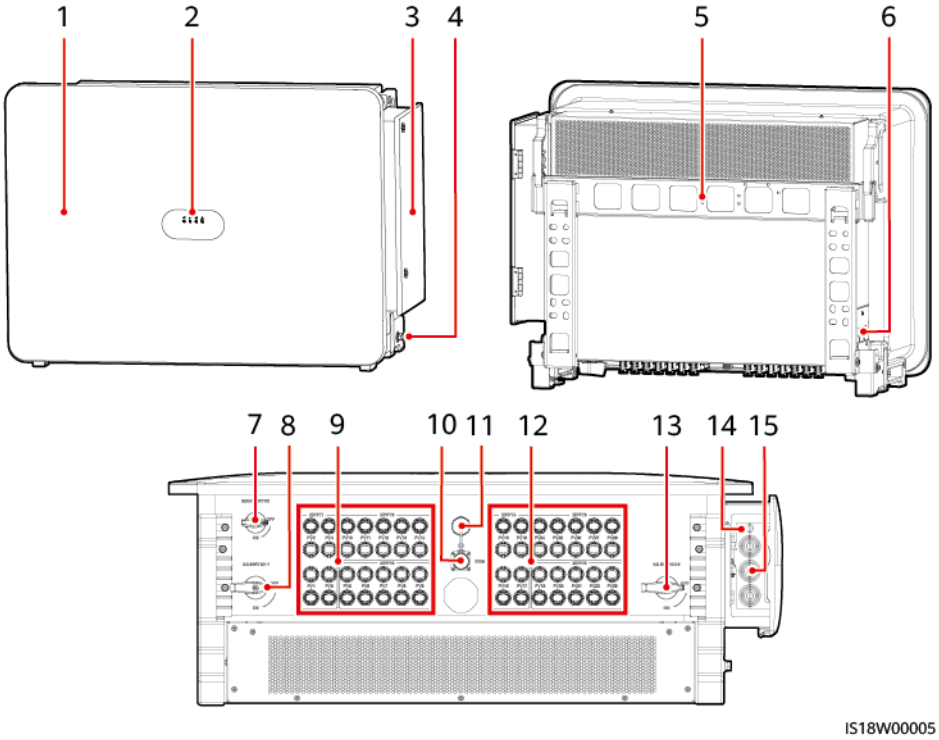

(1) Panel	(2) LED indicators
(3) Maintenance compartment door	(4) Ground point on the enclosure
(5) Mounting bracket[1]	(6) Fan tray
(7) Auxiliary switch (AUX. SWITCH)[2]	(8) DC switch 1 (DC SWITCH 1)
(9) DC input terminal group 1 (PV1–PV14, controlled by DC SWITCH 1)	(10) RS485 communications port (COM)
(11) USB port (USB)	(12) DC input terminal group 2 (PV15–PV28, controlled by DC SWITCH 2)
(13) DC switch 2 (DC SWITCH 2)	(14) Tracking system power cable hole
(15) AC output power cable holes	-

 Copyright © Huawei Technologies Co., Ltd.

NOTE

Note [1]: **Figure 2-8** shows the appearance of the mounting bracket for the offshore SUN2000.

Note [2]: The silkscreen on some models is MAIN SWITCH. The actual product silkscreen may vary.

Figure 2-8 Mounting bracket for the offshore SUN2000

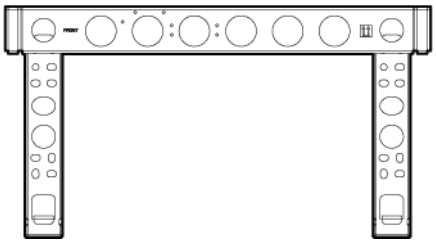

Indicator Description

Indicator	Status (Blinking Fast: On for 0.2s and Off for 0.2s; Blinking Slowly: On for 1s and Off for 1s)	Meaning
PV connection indicator	Steady red	If the alarm/maintenance indicator is steady red, an internal fault at the DC side of the SUN2000 is generated.
	Steady green	At least one PV string is properly connected, and the DC input voltage of the corresponding MPPT circuit is higher than or equal to 500 V.
	Blinking green fast	If the alarm/maintenance indicator is red, an environmental fault at the DC side of the SUN2000 was generated.
	Off	The SUN2000 disconnects from all PV strings, or the DC input voltages of all MPPT circuits are less than 500 V.
Grid connection indicator	Steady red	If the alarm/maintenance indicator is steady red, an internal fault at the AC side of the SUN2000 is generated.
	Steady green	The SUN2000 is in grid-tied mode.
	Blinking green fast	If the alarm/maintenance indicator is red, an environmental fault at the AC side of the SUN2000 was generated.
	Off	The SUN2000 is not in grid-tied mode.

 Copyright © Huawei Technologies Co., Ltd.

Indicator	Status (Blinking Fast: On for 0.2s and Off for 0.2s; Blinking Slowly: On for 1s and Off for 1s)		Meaning
Communication indicator	Blinking green fast		The SUN2000 receives communication data normally.
	Off		The SUN2000 has not received communication data for 10 seconds.
Alarm/Maintenance indicator	Alarm state	Steady red	A major alarm was generated. ● If the PV connection indicator or grid connection indicator is blinking green fast, troubleshoot DC or AC environmental faults as instructed by the app. ● If the PV connection indicator and grid connection indicator are both not blinking green fast, replace components or the device as instructed by the app. (Upon the first power-on, after you turn on the **AUX. SWITCH**, the PV connection indicator is steady green and the alarm indicator is steady red. This is normal and no alarm needs to be handled.)
		Blinking red fast	A minor alarm was generated.
		Blinking red slowly	A warning alarm was generated.
	Local maintenance state	Steady green	The local maintenance is successful.
		Blinking green fast	The local maintenance failed.
		Blinking green slowly	The device is under local maintenance or shut down after receiving a command.

 Copyright © Huawei Technologies Co., Ltd.

NOTE

- The PV connection indicator and the grid connection indicator preferentially indicate environmental faults.
- Local maintenance refers to operations performed after a USB data cable is inserted into the USB port of the inverter. For example, connect to the local app using a USB data cable.
- If alarms are generated during the local maintenance, the alarm/maintenance indicator shows the local maintenance state first. After the USB cable is removed, the indicator shows the alarm state.
- iOS mobile phones do not support connection to the app using a USB data cable. You are advised to use the SmartLogger for O&M.

DC SWITCH

DANGER

- If the DC SWITCH automatically turns off and the inverter generates a **String Reverse Connection**, **String Current Backfeed**, or **String Voltage High** alarm, rectify the fault based on the alarm handling suggestions. After the fault is rectified, wait for at least 3 minutes, turn the switch handle to **OFF** to complete the reset, and then turn it on. For details, see **Resetting and Turning On the DC SWITCH**.
- The DC SWITCH automatically turns off if a fault occurs in the SUN2000. In this case, the alarm/maintenance indicator is steady red and at least one of the PV connection indicator and grid connection indicator is steady red. Then, contact technical support and do not turn on the DC SWITCH by yourself.

Table 2-1 DC SWITCH description

Switch	Description	
DC SWITCH	**ON**	The DC SWITCH is on and can turn off for protection.
	TRIP	The DC SWITCH is automatically turned off. (The switch handle is between **ON** and **OFF**.)
	OFF	The DC SWITCH is off.

Figure 2-9 DC SWITCH

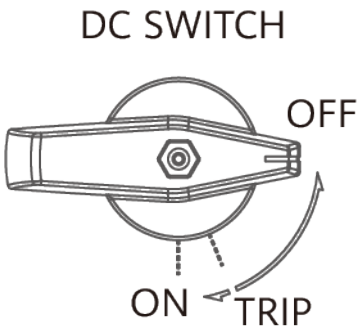

2.4 Circuit Diagram

The inverter receives inputs from 28 PV strings. The inputs are grouped into six MPPT circuits inside the inverter to track the maximum power point of the PV strings. The DC power is converted into three-phase AC power through an inverter circuit. Surge protection is supported on both the DC and AC sides.

Figure 2-10 Circuit diagram

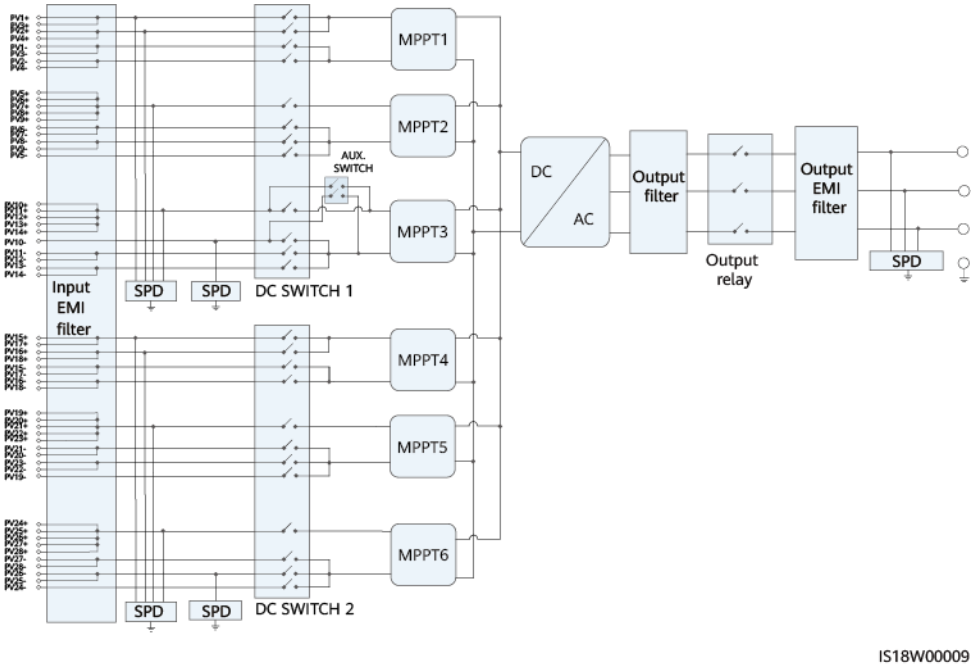

2.5 Working Modes

The inverter has three working modes: standby, operating, and shutdown.

Figure 2-11 Working modes

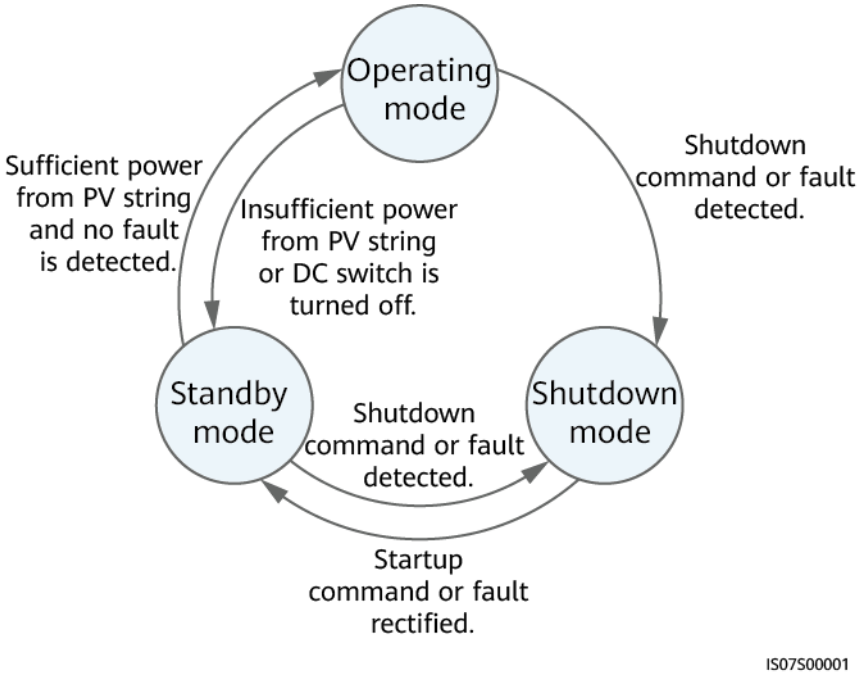

Table 2-2 Working mode description

Working Mode	Description
Standby	The inverter enters the standby mode when the external environment does not meet the operating requirements. In the standby mode: ● The inverter continuously detects its operation status. Once the operation conditions are met, the inverter enters the operating mode. ● If the inverter receives a shutdown command or detects a fault after startup, it enters the shutdown mode.
Operating	In the operating mode: ● The inverter converts DC power received from PV strings into AC power and then feeds the power to the power grid. ● The inverter tracks the maximum power point to maximize the PV string output power. ● If the inverter receives a shutdown command or detects a fault, it enters the shutdown mode. ● If the inverter detects that the output power of PV strings does not meet the requirements for grid-tied power generation, it enters the standby mode.

 Copyright © Huawei Technologies Co., Ltd.

Working Mode	Description
Shutdown	• In the standby or operating mode, if the inverter receives a shutdown command or detects a fault, it enters the shutdown mode. • In the shutdown mode, if the inverter detects that the fault is rectified or receives a startup command, it enters the standby mode.

2.6 Label Description

Symbol	Name	Meaning
	Operation warning	Potential hazards exist after the inverter is powered on. Take protective measures when operating the inverter.
	High temperature hazard	Do not touch the inverter when it is running because its enclosure is hot.
	Electric shock hazard	Hazardous voltage exists after the device is powered on. Take protective measures during operation and maintenance (O&M).
	Delayed discharge	• High voltage exists after the inverter is powered on. Only qualified and trained electrical technicians are allowed to perform operations on the inverter. • Residual voltage exists after the inverter is powered off. It takes 15 minutes for the inverter to discharge to the safe voltage.
	Refer to documentation	Reminds operators to refer to the documentation for the device. Losses caused by operations that do not comply with the requirements of site selection, storage, or mounting specified in the user manual are not covered under the warranty.
	Grounding	Indicates the position for connecting the ground cable.

 Copyright © Huawei Technologies Co., Ltd.

Symbol	Name	Meaning
	Operation warning	Do not remove the DC input connector when the inverter is running.
	Fan operation warning	High voltage exists after the inverter is powered on. Do not touch the fans when the inverter is working.
	Fan replacement warning	Before replacing the fan, disconnect its power connector.
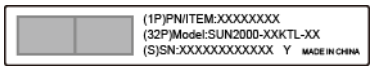	Inverter SN label	Indicates the inverter serial number.
	Weight label	The inverter needs to be carried by four persons or using a forklift.
	DC switch operation warning	After a DC switch is automatically turned off, do not directly reset or turn on the DC switch. Instead, follow the instructions in the section "Resetting and Turning On the DC SWITCH" in the user manual, or contact after-sales service personnel.
	Warning for inserting or removing a DC terminal	Internal high voltage. To remove or insert a DC terminal, perform the following steps: Send a shutdown command. → Turn off the AC switch. → Turn off all DC switches. → Use a clamp meter to check that the PV strings have no current. → Remove or insert the DC terminal.

 Copyright © Huawei Technologies Co., Ltd.

3 Storage Requirements

NOTICE

Store the device according to the storage requirements. Device damage caused by unqualified storage conditions is not covered under the warranty.

If inverters will not be put into use immediately, store them according to the requirements specified in this section. Device damage caused by unqualified storage conditions is not covered under the warranty.

- Do not store the device without outer packaging.
- Do not remove the outer packaging. Check the packaging regularly (recommended: once every three months). Replace any packaging that is damaged during storage. If the inverter is unpacked but will not be used immediately, put it back to the original packaging with the desiccant, and seal with tape.
- Inverters must be stored in a clean and dry environment with appropriate temperature and humidity. The air must not contain corrosive or flammable gases.

Figure 3-1 Storage temperature and humidity

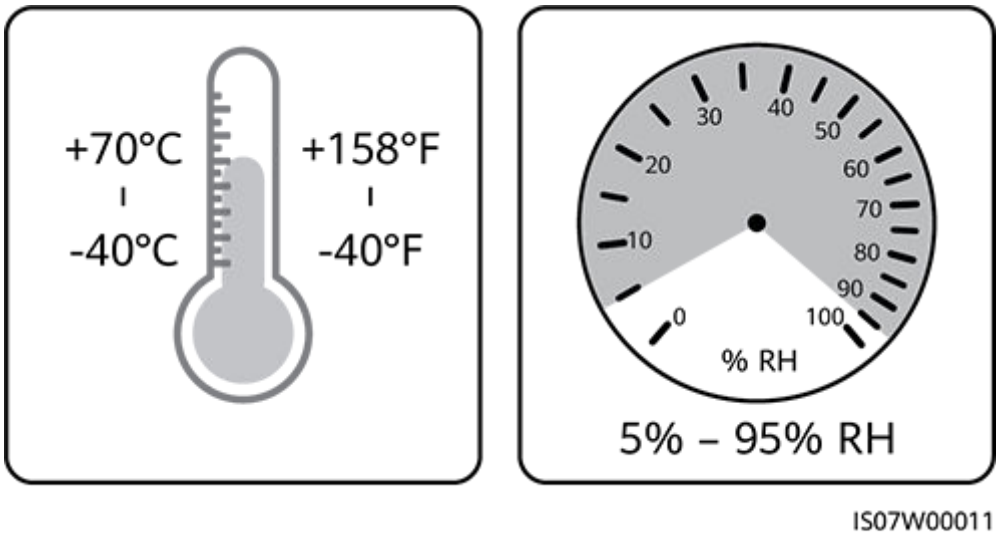

 Copyright © Huawei Technologies Co., Ltd.

- When temporarily storing inverters outdoors, do not stack them on a pallet. Take rainproof measures such as using tarpaulins to protect inverters from rain and water.
- Do not tilt a packing case or place it upside down.
- To avoid personal injury or device damage, stack inverters with caution to prevent them from falling over.

Figure 3-2 Maximum number of stacking layers

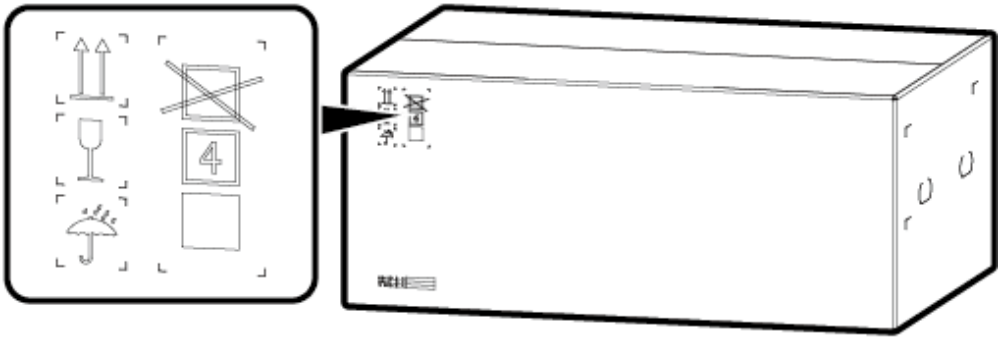

IS12W00007

- Do not store inverters for more than two years. If inverters have been stored for two years or longer, they must be checked and tested by professionals before being put into use.

NOTE

When first used after prolonged storage, the inverters will undergo an initialization phase upon startup. This process typically lasts for 1.5–3 hours. Once initialization is completed, the inverters will operate normally.

 Copyright © Huawei Technologies Co., Ltd.

4 Installation

4.1 Installation Modes

The SUN2000 can be installed on a support or pole clamp.

Table 4-1 Installation modes

Installation Mode	Screw Specifications	Description
Support mounting	M12x40 bolt assembly	Delivered with the product
Pole-clamp mounting	Depending on the pole clamp	Prepared by the customer

4.2 Installation Requirements

4.2.1 Site Selection Requirements

Installation Environment Requirements

- Do not install the inverter in working or living areas to avoid personal injury or property loss caused by accidental contact by non-professionals or other reasons during device operation.
- Do not install the inverter in noise-sensitive areas (such as residential areas, office areas, and schools) to avoid complaints. If the preceding areas are unavoidable, the distance between the installation position and noise-sensitive areas must be greater than or equal to 40 m. Alternatively, use other low-noise models.
- If the inverter is installed in public places (such as parking lots, stations, and factories) other than working and living areas, install a protective net outside the device and set up a safety warning sign to isolate the device. This is to

 Copyright © Huawei Technologies Co., Ltd.

avoid personal injury or property loss caused by accidental contact by non-professionals or other reasons during device operation.

- If the equipment is installed in a place with abundant vegetation, in addition to routine weeding, harden the ground underneath the equipment using cement or gravel (the area shall be greater than or equal to 3 m x 2.5 m).
- Do not install the inverter in areas containing flammable materials (such as sulfur, phosphorus, liquefied petroleum gas, marsh gas, flour, and cotton) to avoid personal injury or property loss caused by fire or other reasons.
- Do not install the inverter in areas containing explosives (such as blasting agents, display shells, fireworks, and firecrackers) to avoid personal injury or property loss caused by explosion or other reasons.
- Do not install the inverter in areas with corrosive substances (such as sulfuric acid, hydrochloric acid, nitric acid, hydrogen sulfide, and chlorine) to avoid inverter failure caused by corrosion, which is not covered under the warranty.
- Do not install the inverter in an easily accessible place, because the voltage is high and its enclosure and heat sink are hot during device operation. This is to avoid personal injury or property loss caused by accidental contact by non-professionals or other reasons during device operation.
- Install the inverter in a well-ventilated environment to ensure good heat dissipation. The inverter provides self-protection in high-temperature environments. If the inverter is installed in a poorly ventilated environment, its energy yield may decrease or its failure rate may increase as the ambient temperature increases.
- Do not install the equipment in an area with strong vibration, noise, or electromagnetic interference. The equipment shall be installed in an environment with a magnetic field strength less than 4 Gauss. If the magnetic field strength is greater than or equal to 4 Gauss, the equipment may fail to work properly. If the magnetic field strength is high, for example, in a smeltery, you are advised to use a gauss meter to measure the magnetic field strength of the equipment installation position when the smelting equipment is running normally.
- If the inverter is installed in an enclosed environment, a heat dissipation device or ventilation device shall be installed. The indoor ambient temperature must not be higher than the outdoor ambient temperature. The inverter provides self-protection in high-temperature environments. Its energy yield may decrease or its failure rate may increase as the ambient temperature increases.
- Install the inverter in a sheltered place to prevent exposure to direct sunlight. The inverter provides self-protection in high-temperature environments. If the inverter is installed in a place subject to direct sunlight, its energy yield may decrease or its failure rate may increase as the temperature increases.
- Do not install the equipment in salt-affected areas because it may be corroded. If the equipment has to be installed in a salt-affected area, consult the Company. A salt-affected area refers to the region within 500 m of the coast or prone to sea breeze. Regions prone to sea breeze vary with weather conditions (such as typhoons and monsoons) or terrains (such as dams and hills).
- The distance between each inverter and the AC combiner box or the low-voltage panel of the transformer station must be at least 10 m, or the total distances from two adjacent inverters to the AC combiner box or the low-

voltage panel of the transformer station must be at least 20 m. The inverter provides output resonance self-protection. Its energy yield may decrease if protection against resonance is triggered as the length of the inverter output cables decreases.

- The positive and negative DC PV string cables within 1.5 m of the inverter shall be routed in separate pipes to prevent cable damage and short circuits caused by improper operations during construction. For details, see **Figure 5-1**.
- Take waterproof and insulation measures for unused DC power cables. High voltage may exist in unused DC power cables. Take measures to prevent personal injury or property damage caused by accidental contact with high voltage or other reasons.
- Cables must be vertically routed into combiner boxes and wiring terminals to avoid damage caused by horizontal stress on the terminals, which is not covered under the warranty.
- If an inverter has not been running for six months or longer (three months or longer in the offshore scenario) after being mounted, it may have failed and must be checked and tested by professionals before being put into operation.
- To prevent the inverter from being corroded by moisture, PV terminals that will not be used for a long time must be sealed with dedicated PV terminal plugs. Inverter failure due to not using dedicated PV terminal plugs is not covered under the warranty.

NOTE

- The inverter shall be physically separated from residential environments or radio receivers by distance greater than 30 m.
- Caution: This equipment is not intended for use in residential environments and may not provide adequate protection to radio reception in such environments.

 Copyright © Huawei Technologies Co., Ltd.

Figure 4-1 Installation environment requirements

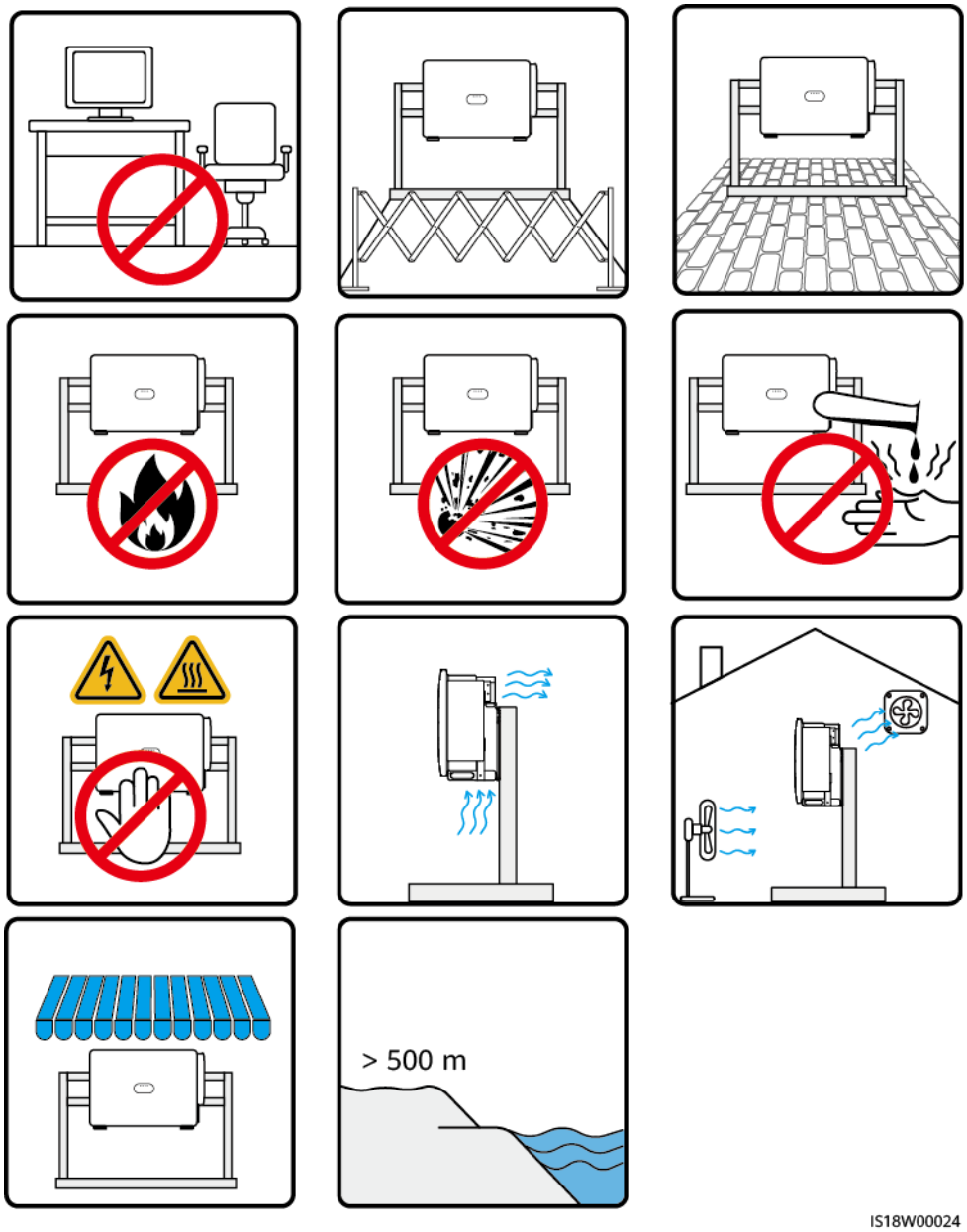

Mounting Structure Requirements

- The mounting structure for the inverter must be fireproof. Do not install the inverter on flammable building materials to avoid personal injury or property loss caused by fire or other reasons.
- Do not install the inverter on a mounting structure that may generate resonance.
- Ensure that the installation surface is solid enough to bear the weight of the inverter to avoid personal injury or property loss caused by the collapse of the mounting structure or other reasons.

Figure 4-2 Mounting structure requirements

4.2.2 Clearance Requirements

Dimensions

Figure 4-3 Dimensions

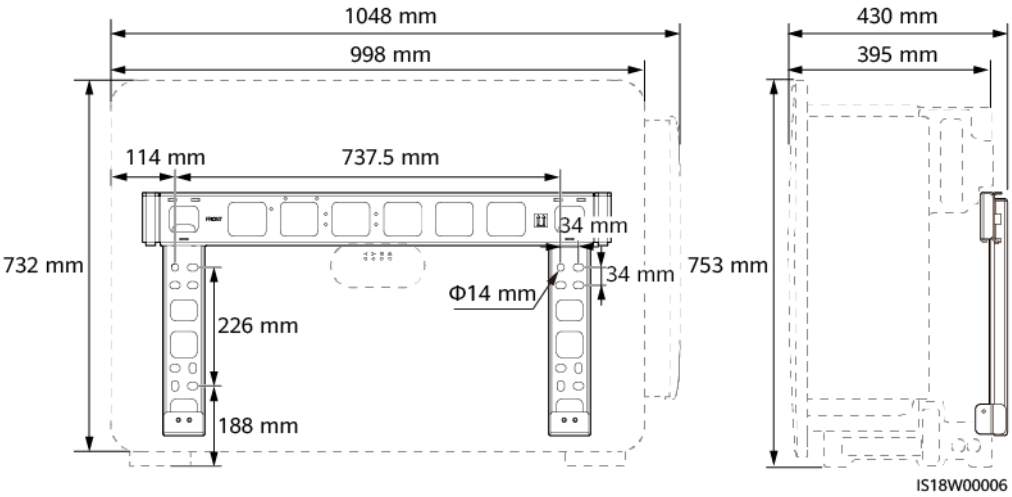

Installation Clearance Requirements

Reserve sufficient clearance around the inverter for installation and heat dissipation. The inverter provides self-protection in high-temperature environments. The impact of environment changes on the clearance for heat dissipation needs be considered during design. The heat dissipation clearance around the inverter may become insufficient for reasons such as rotation axis change. The energy yield of the inverter may decrease or its failure rate may increase if heat cannot be effectively dissipated.

 Copyright © Huawei Technologies Co., Ltd.

Figure 4-4 Clearance

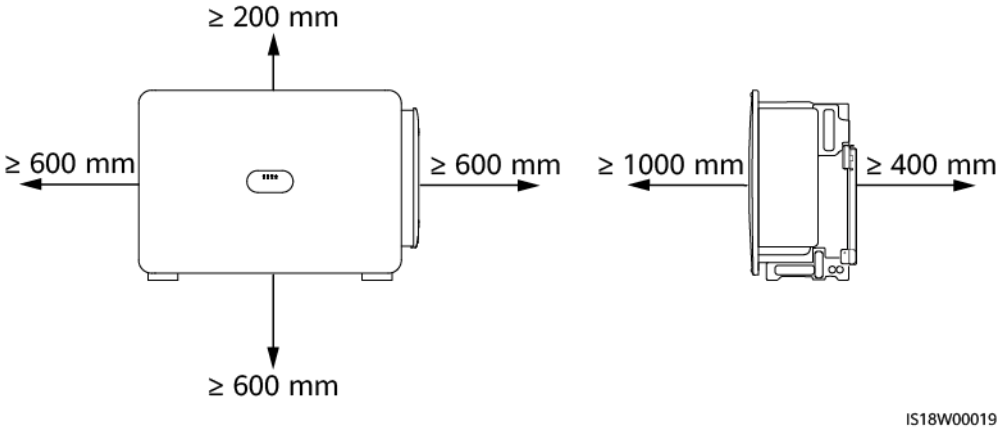

NOTE

The clearance from the bottom must meet the requirements on the bending radius of the AC output power cables.

If multiple inverters need to be installed and the clearance is sufficient, install them in horizontal mode. The triangle, back-to-back, and close-to-wall installation modes are not recommended. For triangle, back-to-back, and close-to-wall installation modes, you need to prepare air baffles to isolate air intake from air exhaust.

Figure 4-5 Horizontal installation mode (recommended)

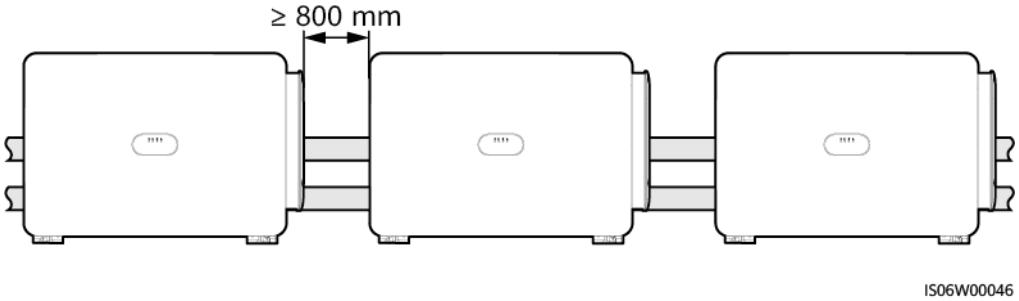

Figure 4-6 Triangle installation mode (not recommended)

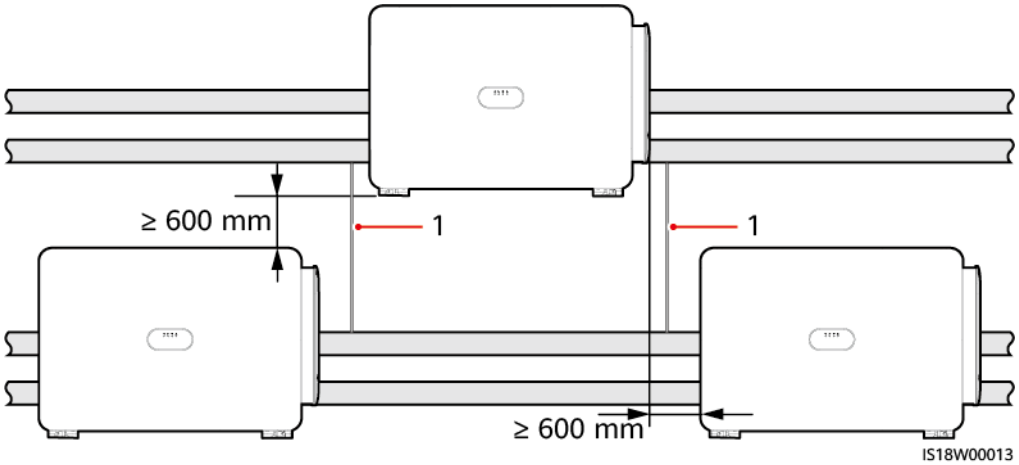

(1) Air baffle

NOTE

Stacked installation is not allowed.

Figure 4-7 Close-to-wall installation mode (not recommended)

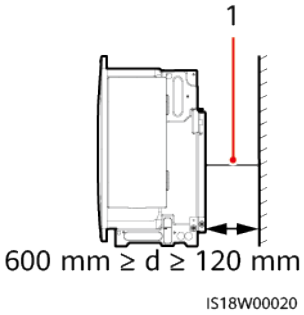

(1) L-shaped air baffle

NOTE

- In close-to-wall installation mode, reserve space for the air channel and install an L-shaped air baffle to prevent air intake and exhaust from forming return flow. If the distance between the mounting bracket and the wall is greater than 600 mm, the air baffle is not required.
- It is recommended that an L-shaped air baffle be made of aluminum plates with a thickness greater than or equal to 2 mm and a recommended width of d–10 mm (d indicates the distance between the mounting bracket and the wall).

When the distance between the mounting bracket and the wall is 120 mm, the recommended dimensions of an air baffle are as follows:

Figure 4-8 Recommended air baffle dimensions

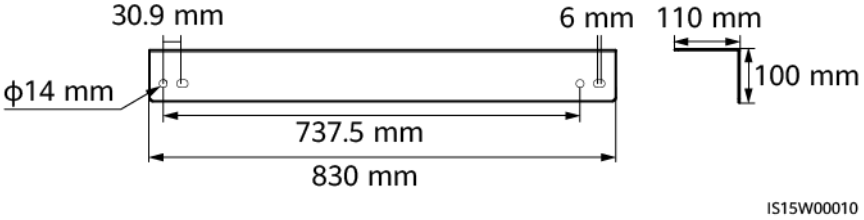

Preinstall the air baffle on the mounting bracket and then install the mounting bracket with the air baffle on the wall support.

Figure 4-9 Installing an air baffle

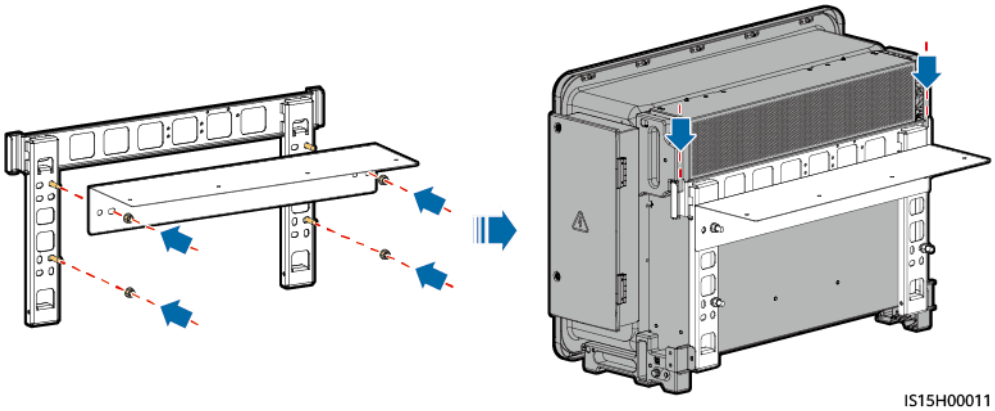

4.2.3 Angle Requirements

The inverter can be installed on a support. The installation angle requirements are as follows:

- Install the inverter vertically or at a maximum back tilt of 75 degrees to facilitate heat dissipation.
- Do not install the inverter at forward tilted, excessive backward tilted, side tilted, horizontal, or upside down positions.

Figure 4-10 Installation angle

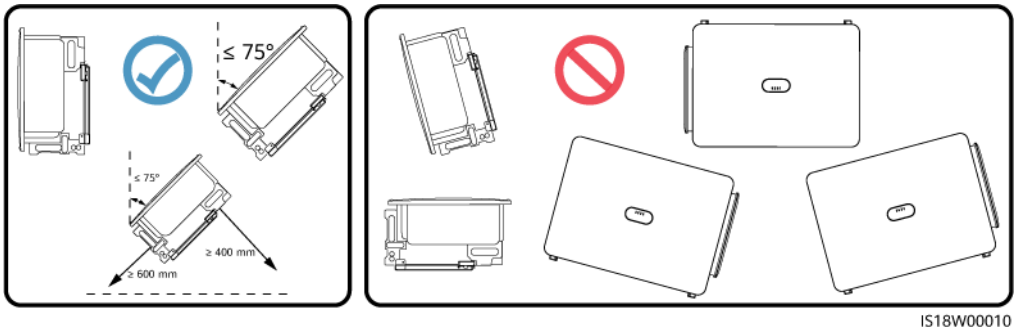

4.3 Preparing Tools

Table 4-2 Personal protective equipment (PPE)

Safety helmet	Goggles	Protective shoes	Reflective vest
Insulated gloves	Protective gloves	Dust mask	Insulated shoes

Table 4-3 Hoisting and transporting tools

Crane	Pallet truck	Lifting rope	-

Table 4-4 Hardware installation tools

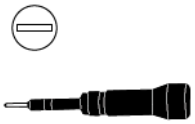 Flat-head insulated torque screwdriver (M3)	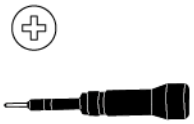 Phillips insulated torque screwdriver (M3/M4)	Insulated torque socket wrench (M4/M10/M12, including an extended socket)	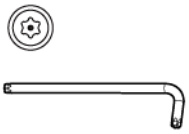 Torx key

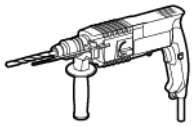 Hammer drill	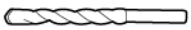 Hammer drill bit (Φ14 mm)	Utility knife	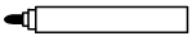 Marker
Insulated ladder	-	-	-

Table 4-5 Cable installation tools

Cable cutter	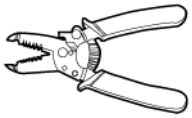 Wire strippers	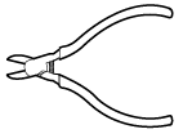 Diagonal pliers	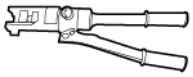 Hydraulic pliers
Heat gun	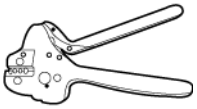 Crimping tool H4STC0001 (AMPHENOL) or CT75A-FJB10 (AVIC)	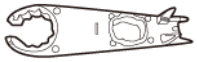 Removal wrench H4TW0001 (AMPHENOL) or CT75A-FJB7 (AVIC)	-

Table 4-6 Measurement instruments

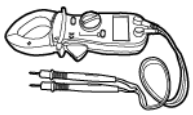 Clamp meter	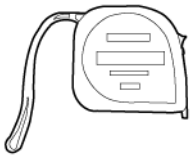 Steel measuring tape	Level	Multimeter DC voltage measurement range ≥ 1500 V DC
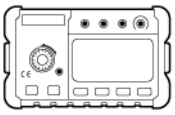 Insulation resistance tester (output voltage > 1500 V)	-	-	-

Table 4-7 Auxiliary materials and other tools

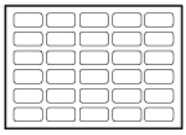 Label	Cable tie	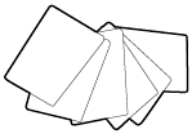 Cotton cloth	Sandpaper
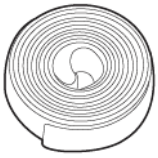 Heat-shrink tubing	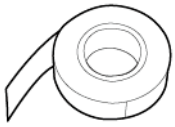 Insulation tape	Brush	Vacuum cleaner

4.4 Check Before Installation

Checking Outer Packing

Before unpacking the inverter, check the outer packing for damage, such as holes and cracks, and check the inverter model. If any damage is found or the inverter model is not what you requested, do not unpack the device and contact your vendor as soon as possible.

NOTE

You are advised to remove the outer packaging within 24 hours before installing the inverter.

Checking Deliverables

NOTICE

- After placing the equipment in the installation position, unpack it with care to prevent scratches. Keep the equipment stable during unpacking.

- After unpacking the inverter, check that the deliverables are intact and complete. If any item is missing or damaged, contact your vendor.
- Do not step on or sit on the inverter. The Company will not be held responsible for any resulting damage or deformation to the inverter.

NOTE

For details about the quantity of deliverables, see the *Packing List* in the packing case.

4.5 Moving the SUN2000

Step 1 Take the SUN2000 out of the packing case and move it to the installation position.

 Copyright © Huawei Technologies Co., Ltd.

NOTICE

- After placing the equipment in the installation position, unpack it with care to prevent scratches. Keep the equipment stable during unpacking.
- Handles are packed in a fitting bag and are not delivered with the SUN2000.
- Secure the lifting handles (with the steel washers of the lifting handles closely fitted to the device).
- If the stud of a lifting handle is bent, replace the lifting handle in time.
- Four persons or appropriate transportation tools are required to move the SUN2000.
- Do not use the ports or wiring terminals at the bottom to support any weight of the SUN2000.
- When you need to temporally place the SUN2000 on the ground, use foam, cardboard, or other protection material to prevent damage to its enclosure.

Figure 4-11 Moving the SUN2000

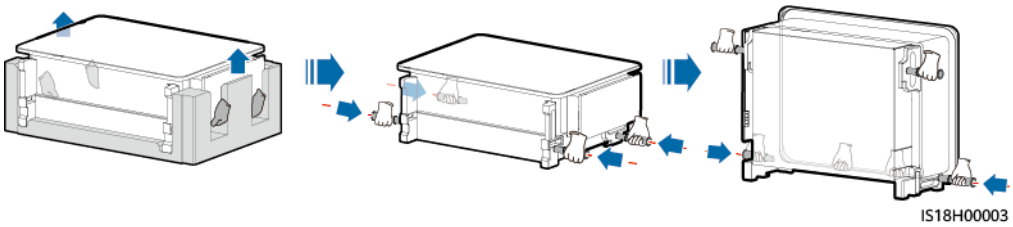

NOTE

If the installation position is high, you can hoist the SUN2000.

Figure 4-12 Hoisting

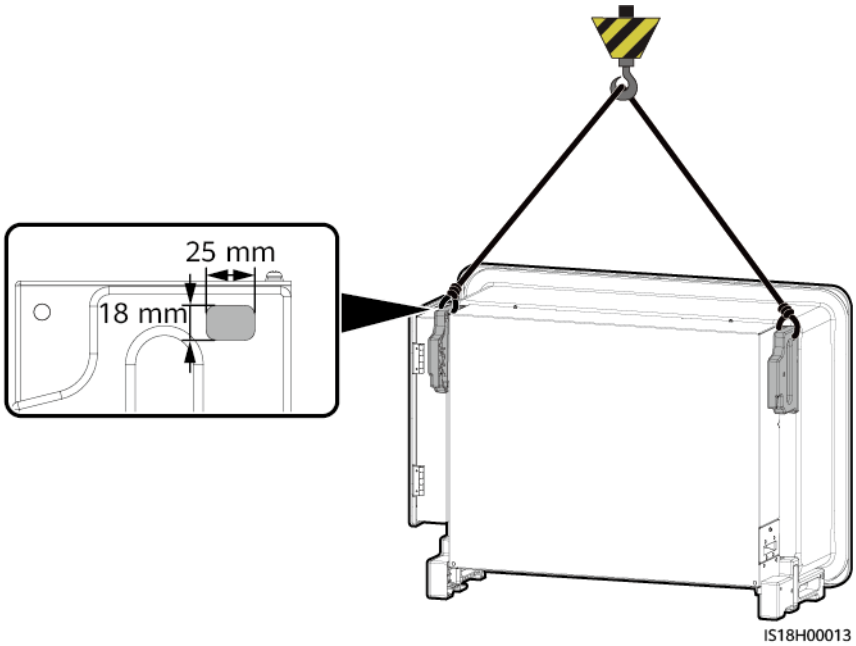

----End

4.6 Installing the SUN2000 on a Support

Figure 4-13 Support mounting

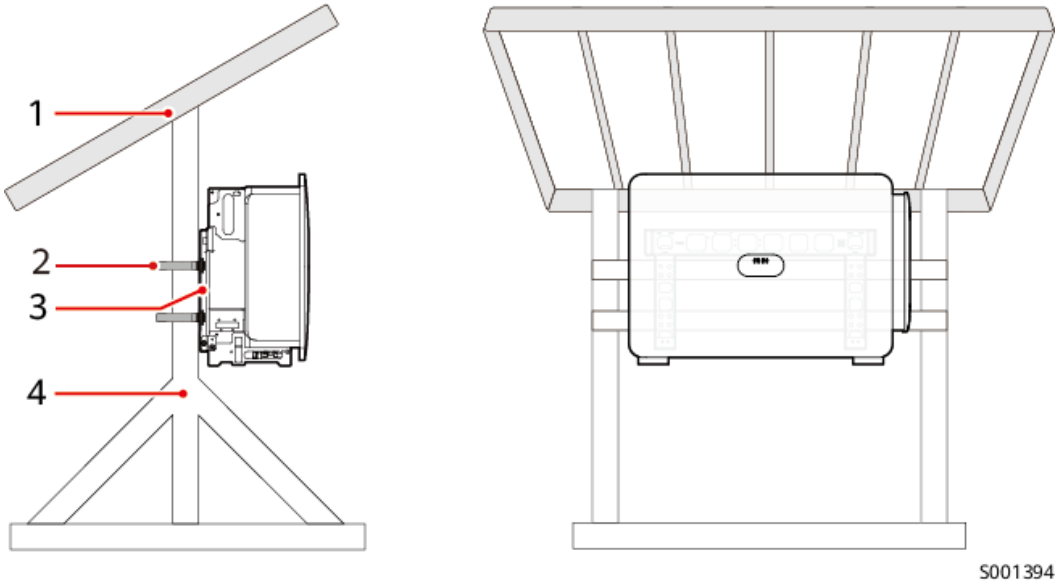

(1) PV module or awning	(2) Bolt assembly	(3) Mounting bracket	(4) Support

NOTE

- The PV module or awning shown in the figure is for reference only. Factors such as the local sunlight angle and temperature must be considered during evaluation and design.
- The following describes the orientations of the PV module or awning and inverter:
  - If the local area is in the northern hemisphere, the front of the inverter shall face north, and the PV module or awning shall face south.
  - If the local area is in the southern hemisphere, the front of the inverter shall face south, and the PV module or awning shall face north.

Step 1 Remove the torx key and store it properly.

Figure 4-14 Removing the torx key

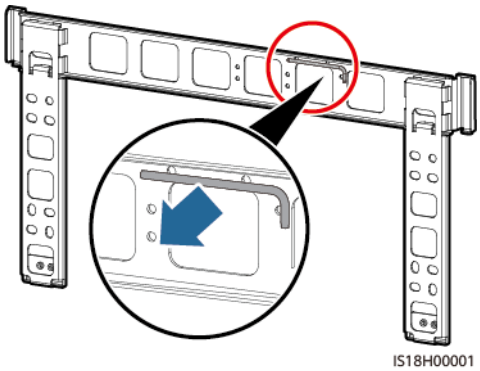

Step 2 Secure the mounting bracket.

NOTE

- The mounting bracket of the inverter has four groups of tapped holes, each group containing four tapped holes. Mark any hole in each group based on site requirements and mark four holes in total. The two round holes are recommended.
- M12x40 bolt assemblies are delivered with the SUN2000 and bound to the mounting bracket. If the bolt length does not meet the installation requirements, prepare M12 bolt assemblies by yourself and use them together with the delivered M12 nuts.

Figure 4-15 Installing the mounting bracket

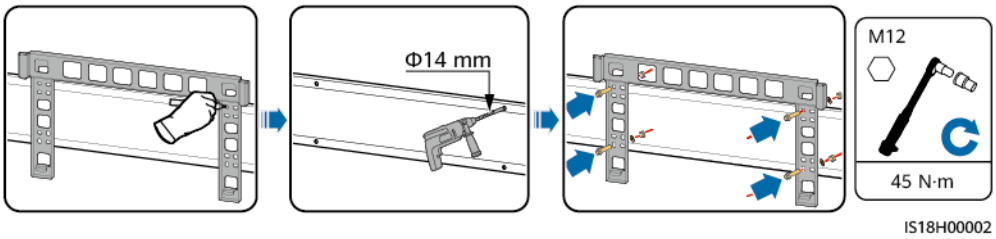

Step 3 Secure the SUN2000.

Figure 4-16 Securing the SUN2000

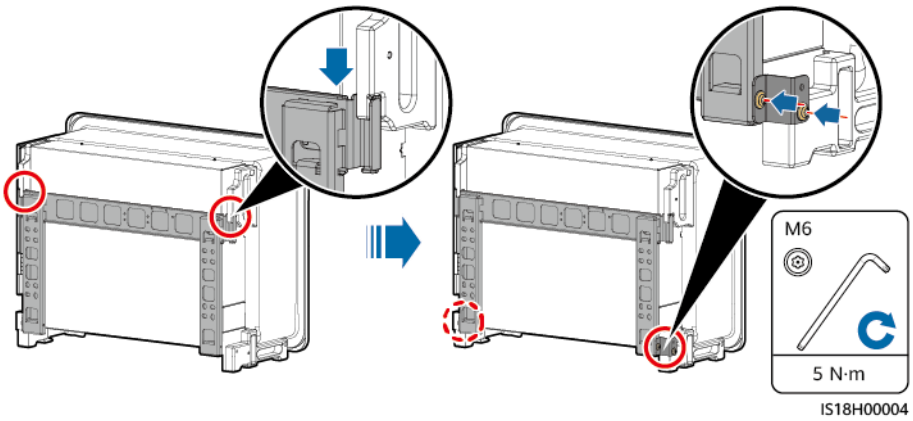

Step 4 Install an awning (optional if the inverter is installed under a PV module).

----End

4.7 Installing the SUN2000 on a Pole Clamp

Figure 4-17 Pole-clamp mounting

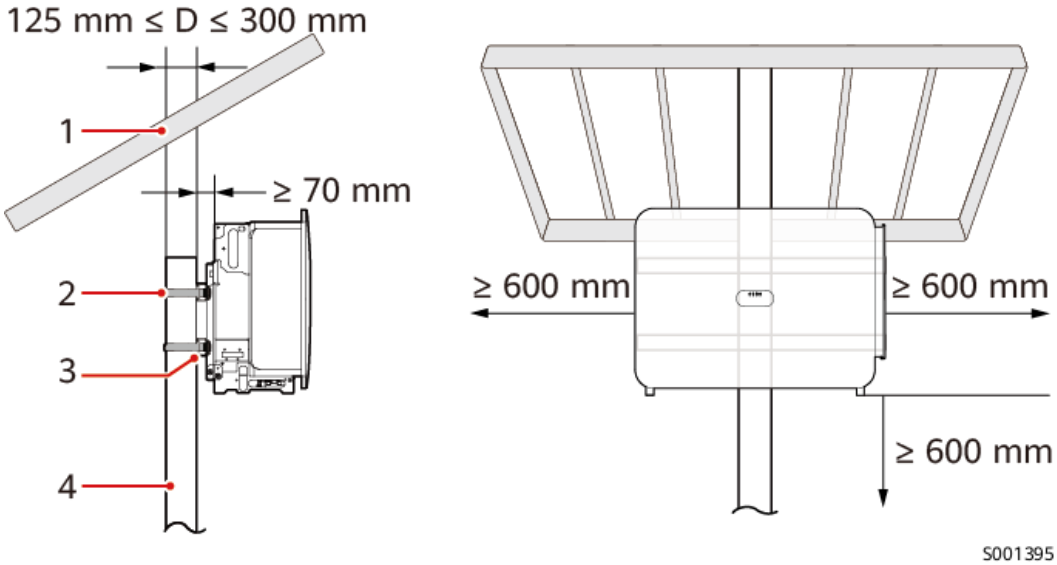

(1) PV module or awning (2) Square bolt clamp (3) Inverter mounting beam (4) Vertical pole

NOTE

- The PV module or awning shown in the figure is for reference only. Factors such as the local sunlight angle and temperature must be considered during evaluation and design.
- The following describes the orientations of the PV module or awning and inverter:
  - If the local area is in the northern hemisphere, the front of the inverter shall face north, and the PV module or awning shall face south.
  - If the local area is in the southern hemisphere, the front of the inverter shall face south, and the PV module or awning shall face north.

 Copyright © Huawei Technologies Co., Ltd.

5 Electrical Connections

5.1 Precautions

DANGER

When exposed to sunlight, the PV arrays supply DC voltage to the inverter. Before connecting cables, ensure that all **DC SWITCH** on the inverter are OFF. Otherwise, the high voltage of the inverter may result in electric shocks.

DANGER

- The site must be equipped with qualified fire fighting facilities, such as fire sand and carbon dioxide fire extinguishers.
- Wear personal protective equipment and use dedicated insulated tools to avoid electric shocks or short circuits.

WARNING

- The equipment damage caused by incorrect cable connections is beyond the warranty scope.
- Only certified electrician can perform electrical terminations.
- Operation personnel must wear PPE when connecting cables.
- Before connecting cables to ports, leave enough slack to reduce the tension on the cables and prevent poor cable connections.

 Copyright © Huawei Technologies Co., Ltd.

CAUTION

- Stay away from the equipment when preparing cables to prevent cable scraps from entering the equipment. Cable scraps may cause sparks and result in personal injury and equipment damage.
- The positive and negative DC PV string cables within 1.5 m of the inverter shall be routed in separate pipes to prevent cable damage and short circuits caused by improper operations during construction.

Figure 5-1 Cable routing in different pipes

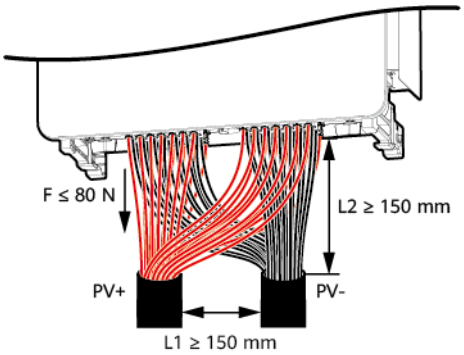

NOTE

The cable colors shown in the electrical connection diagrams provided in this section are for reference only. Select cables in accordance with local cable specifications (green-and-yellow cables are only used for protective earthing).

 Copyright © Huawei Technologies Co., Ltd.

5.2 Preparing Cables

Figure 5-2 Inverter cable connections (configure the components in the dotted box as required)

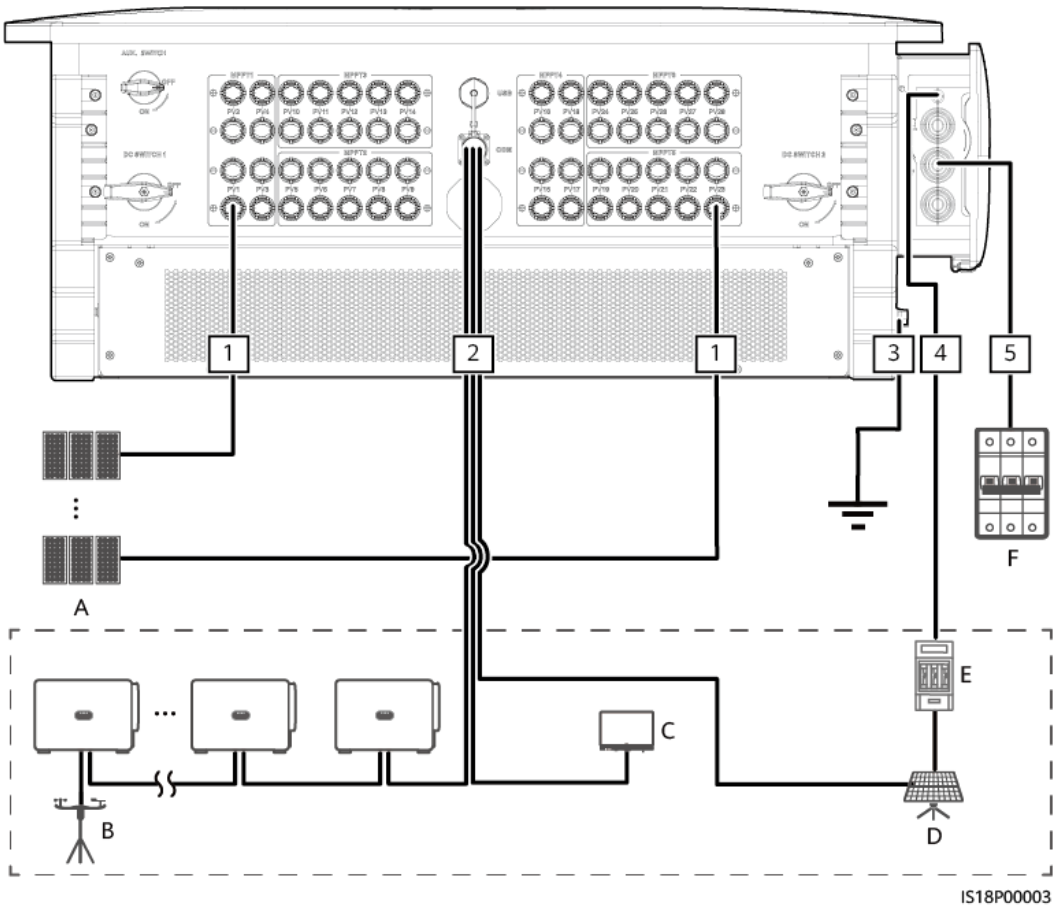

Table 5-1 Component description

No.	Component	Description	Source
A	PV string	• A PV string consists of PV modules connected in series. • The SUN2000 supports 28 PV string inputs.	Prepared by the customer
B	Environmental monitoring instrument (EMI)	When the SmartLogger is used, the EMI can be directly connected to the SmartLogger or connected to the last inverter cascaded over RS485.	Prepared by the customer
C	SmartLogger	The inverter system communicates with the management system through the SmartLogger.	Purchased from the Company
D	Tracking system	The angle of trackers can be adjusted.	Prepared by the customer

No.	Component	Description	Source
E	Fuse/Circuit breaker	The tracking system should be equipped with an overcurrent protection device or component. The power cable between the device or component and the wiring terminal should be shorter than or equal to 2.5 m. A fuse or a circuit breaker is recommended. ● Installed between the inverter and the tracking control box ● Fuse specifications: rated voltage ≥ 800 V; rated current: 16 A; protection: gG ● Circuit breaker specifications: rated voltage ≥ 800 V; rated current: 16 A; tripping: C	Prepared by the customer
F	AC switch	To ensure that the SUN2000 can be safely disconnected from the power grid when an exception occurs, connect an AC switch to the AC side of the SUN2000. Select an appropriate AC switch in accordance with local industry standards and regulations. ● Installed in the AC combiner box ● Recommended: a three-phase AC circuit breaker with a rated voltage greater than or equal to 800 V AC and a rated current of 400 A	Prepared by the customer

NOTICE

The SUN2000 has an internal residual current monitoring unit (RCMU). Its external AC switch should be a three-phase circuit breaker or any other AC load circuit breaker to safely disconnect the SUN2000 from the power grid.

NOTE

- The cable diameter must comply with local cable standards.
- The factors that affect cable selection include the rated current, cable type, routing mode, ambient temperature, and maximum expected line loss.

Table 5-2 Cable description (S indicates the conductor cross-sectional area of the AC output cable, and S_p indicates the conductor cross-sectional area of the PE cable)

No.	Cable	Type	Conductor Cross-Sectional Area	Outer Diameter	Source
1	DC input power cable	1500 V copper multi-strand twisted PV cable [1][2]	4–6 mm^2	5–7.8 mm	Prepared by the customer

No.	Cable	Type	Conductor Cross-Sectional Area	Outer Diameter	Source
2	RS485 communications cable	Outdoor shielded twisted pair cable that meets the local standard	0.25–1 mm^2	• One or two communications cables: 4–11 mm • Three communications cables: 4–8 mm	Prepared by the customer
3	PE cable[3]	Single-core outdoor copper cable and M10 OT/DT terminal	$S_p \geq S/2$	-	Prepared by the customer
4	Tracking system power cable	Three-core outdoor copper cable with two layers of protection and M4 OT terminal	10 mm^2	15–18 mm	Prepared by the customer
5	AC output power cable (single-core)	(Recommended) Single-core outdoor cable and M12 OT/DT terminal	• Copper cable: – S: 120–400 mm^2 – $S_p \geq S/2$ • Aluminum alloy cable or copper-clad aluminum cable: – S: 150–400 mm^2 – $S_p \geq S/2$	14–40 mm	Prepared by the customer

 Copyright © Huawei Technologies Co., Ltd.

No.	Cable	Type	Conductor Cross-Sectional Area	Outer Diameter	Source
	AC output power cable (multi-core) [4]	• If the ground point on the enclosure is used, three-core (L1, L2, and L3) outdoor cables and M12 OT/DT terminals (L1, L2, and L3) are recommended. • If the ground point in the maintenance compartment is used, four-core (L1, L2, L3, and PE) outdoor cables, M12 OT/DT terminals (L1, L2, and L3), and M10 OT/DT terminals (PE) are recommended. You do not need to prepare a PE cable.	• Copper cable: – S: 120–240 mm^2 – $S_p \geq S/2$ • Aluminum alloy cable or copper-clad aluminum cable: – S: 150–240 mm^2 (cable stripping inside the compartment); S: 300–400 mm^2 (cable stripping outside the compartment supported when protection is added) – $S_p \geq S/2$	24–66 mm	Prepared by the customer

- Note [1]: Do not connect aluminum or aluminum alloy DC power cables directly to the DC terminals of the inverter.
- Note [2]: The 1500 V PV cables must comply with IEC 62930 or EN 50618.
- Note [3]: The value of S_p is valid only if the conductors of the PE cable and AC power cable use the same material. If the materials are different, ensure that the conductor cross-sectional area of the PE cable produces a conductance equivalent to that specified in this table. The specifications of the PE cable are subject to this table or calculated according to IEC 60364-5-54.
- Note [4]: For details about the installation procedure and precautions for cable stripping outside the compartment, see **5.5 Requirements for AC Power Cable Stripping Outside the Compartment**.

5.3 Connecting a PE Cable

Precautions

- Preferentially connect the PE cable for the SUN2000 to the ground point on the enclosure. The ground point in the maintenance compartment is used for connecting to the PE wire of a multi-core AC power cable.
- It is recommended that the SUN2000 be connected to a nearby ground point. For a system with multiple inverters connected in parallel, connect the PE points of all inverters to ensure equipotential bonding between PE cables.

Procedure

Step 1 Connect the PE cable to the ground point. To enhance the corrosion resistance of a ground terminal, apply silicone grease or paint on it after connecting the PE cable to the ground point on the enclosure.

Figure 5-3 Connecting a PE cable to the ground point (on the enclosure)

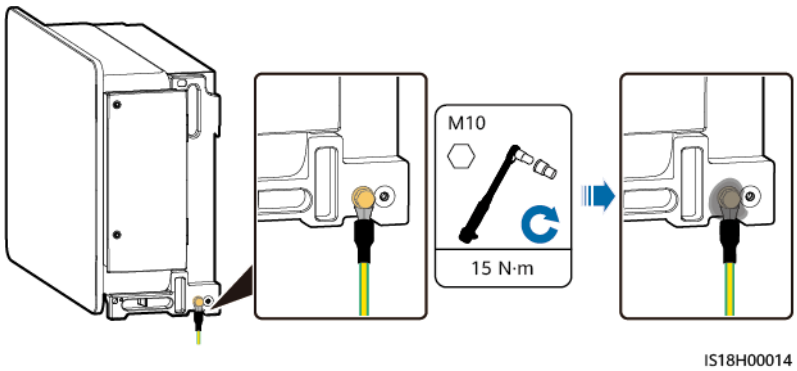

----End

5.4 Connecting an AC Output Power Cable

Precautions

- A three-phase AC switch shall be installed on the AC side of the inverter. To ensure that the inverter can safely disconnect itself from the power grid when an exception occurs, select a proper overcurrent protection device in compliance with local power distribution regulations.
- The inverter is integrated with a comprehensive residual current detection unit to distinguish fault current from residual current. Upon detecting that the residual current exceeds the threshold, the inverter immediately disconnects from the power grid.

 Copyright © Huawei Technologies Co., Ltd.

WARNING

- Do not connect loads between an inverter and an AC switch that directly connects to the inverter. Otherwise, the switch may trip by mistake.
- If an AC switch is used with specifications beyond local standards, regulations, or the Company's recommendations, the switch may fail to turn off in a timely manner in case of exceptions, causing serious faults.
- Do not open the panel of the inverter.
- Before opening the maintenance compartment door, ensure that no electrical connections are made for the inverter on the AC or DC side.
- Do not open the maintenance compartment door on rainy or snowy days. If you need to, take protective measures to prevent rain or snow from entering the maintenance compartment. If protective measures cannot be taken, do not open the maintenance compartment door.
- Do not leave unused screws in the maintenance compartment.

CAUTION

Each inverter shall be equipped with an AC output switch. Multiple inverters shall not connect to the same AC switch.

NOTICE

- The cable outer diameter can be measured using the ruler sticker in the maintenance compartment.
- Ensure that the cable jacket is in the maintenance compartment.
- Ensure that the AC output power cables are connected securely and insulated properly (using three-way breakout boots and cold/heat shrink tubing). Otherwise, the inverter may fail to operate, or become overheated during operation due to an unreliable connection, which will damage the terminal block. The resulting device damage is not covered by the warranty.
- In the quick scheduling scenario with MBUS communication networking, connect AC power cables in the maintenance compartment from left to right in the sequence of L1, L2, and L3.

 Copyright © Huawei Technologies Co., Ltd.

Table 5-3 Bending radius requirements for AC power cables

Picture	Single-core Cable		Three-core or Four-core Cable	
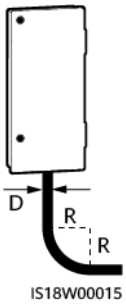	Unarmored	Armored	Unarmored	Armored
	R ≥ 20D	R ≥ 15D	R ≥ 15D	R ≥ 12D
	R indicates the bending radius, and D indicates the outer diameter of the cable. **NOTE** The AC power cable must be routed vertically into the maintenance compartment.			

Wiring Area

Figure 5-4 Wiring ports

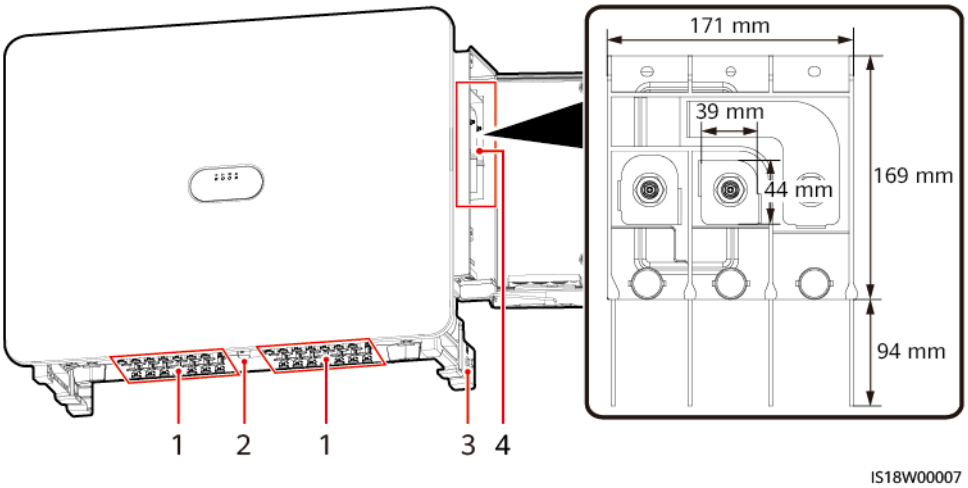

(1) DC input terminals
(2) RS485 communications port
(3) Ground point on the enclosure
(4) AC terminal block

Procedure

Step 1 Open the maintenance compartment door and install the support strut. Remove the accessories and set them aside.

Figure 5-5 Opening a maintenance compartment door

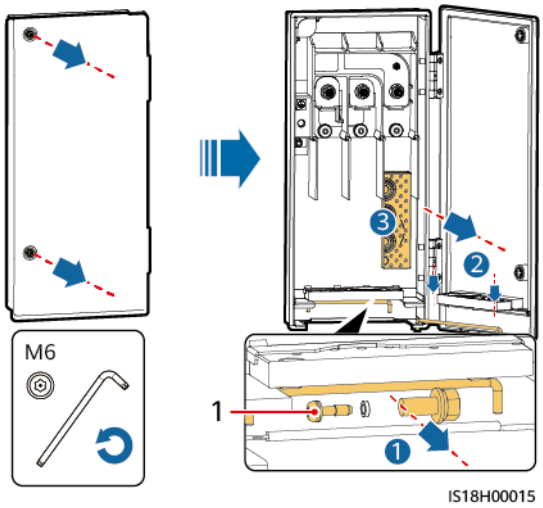

(1) Position for binding the ground screw

Step 2 Connect the AC output power cables based on the cable type.

Figure 5-6 Specifications of the crimped OT/DT terminal

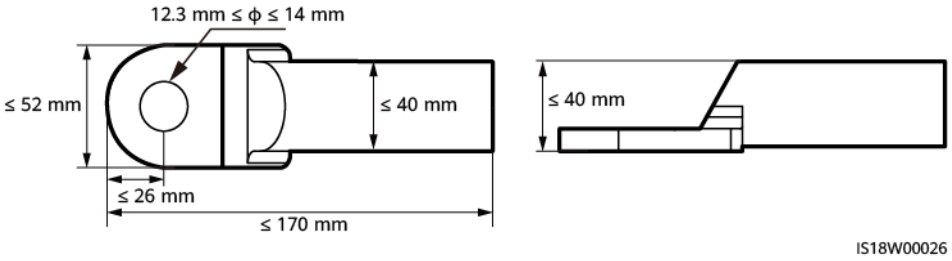

Figure 5-7 Cable connection 1

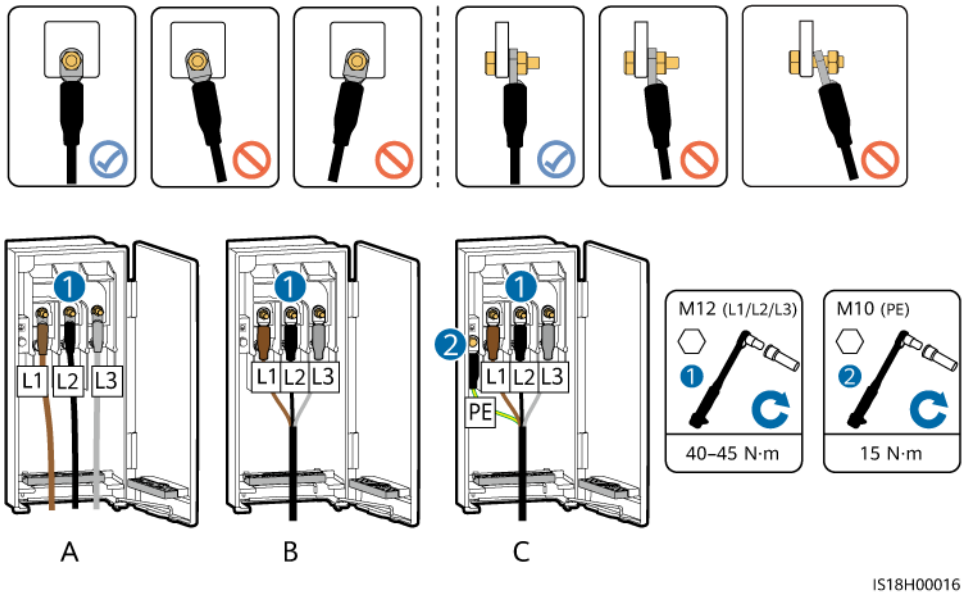

(A) Single-core cables (B) Three-core cable (C) Four-core cable

Figure 5-8 Cable connection 2

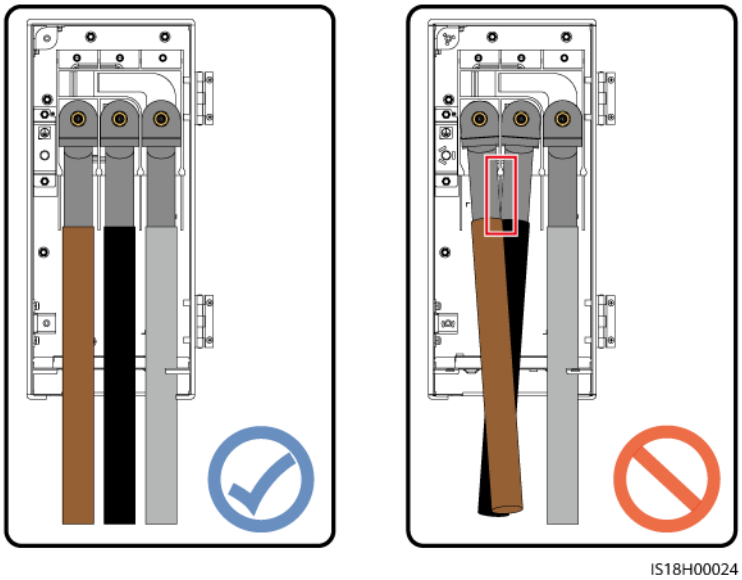

NOTICE

- Reserve sufficient slack for the PE cable to ensure that the last cable bearing the force is the PE cable when the AC output power cable is subject to a pulling force due to force majeure.
- After cables are connected, prevent them from contacting the inter-phase baffle plates.

Figure 5-9 Single-core cable connection

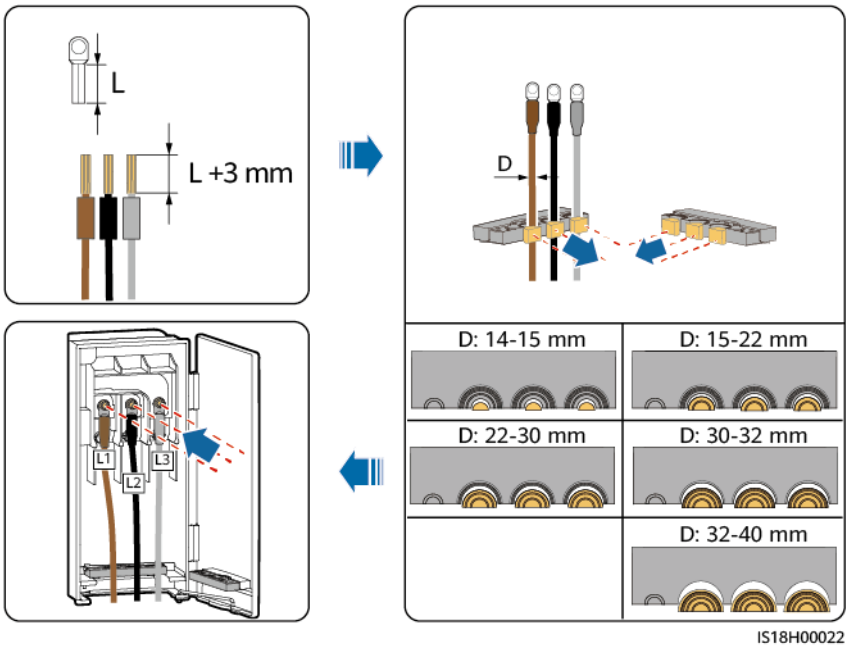

Copyright © Huawei Technologies Co., Ltd.

NOTICE

If a multi-core cable is used, it is recommended that the stripping length of the L2 wire be 15 mm shorter than those of the L1 and L3 wires.

Figure 5-10 Multi-core cable connection (using a three-core cable as an example)

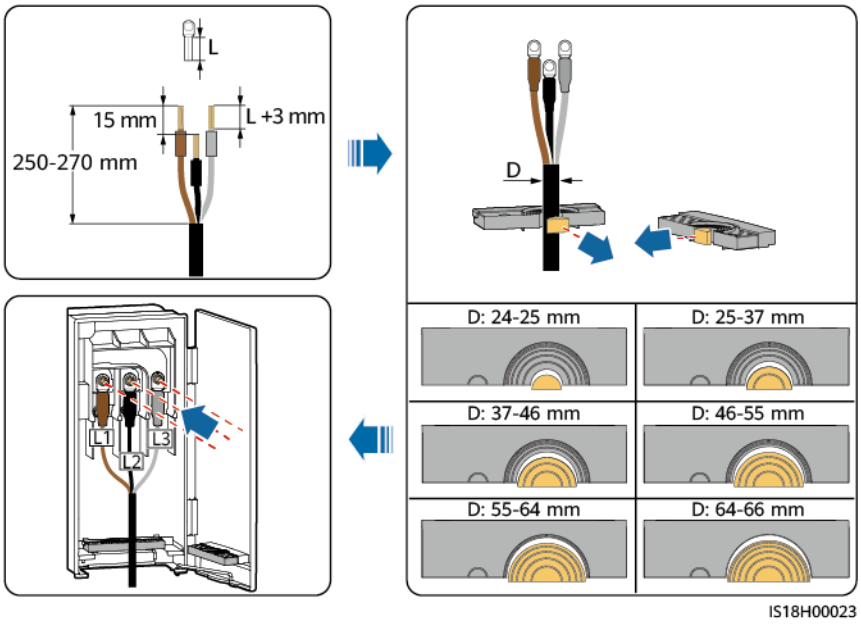

Step 3 If the system is configured with a tracking system, connect the power cable of the tracking system.

WARNING

- The tracking system obtains power from the AC three-phase power grid. The rated voltage of the power supply is the rated output voltage of the inverter.
- Keep flammable materials away from cables.
- Cables must be protected with a conduit to prevent short circuits caused by insulation layer damage.

 Copyright © Huawei Technologies Co., Ltd.

Figure 5-11 Connecting a power cable of the tracking system

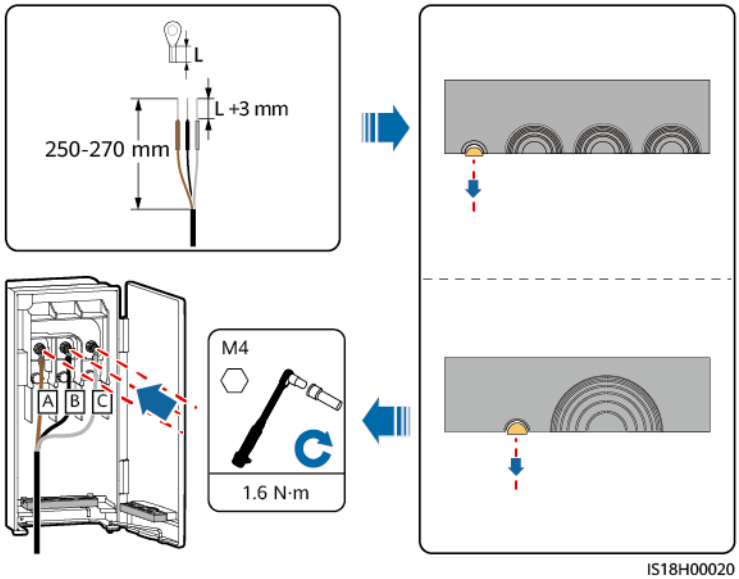

Step 4 Clear foreign matter from the maintenance compartment, close the maintenance compartment door, and check that the cable holes at the bottom of the maintenance compartment are sealed.

Figure 5-12 Closing a door

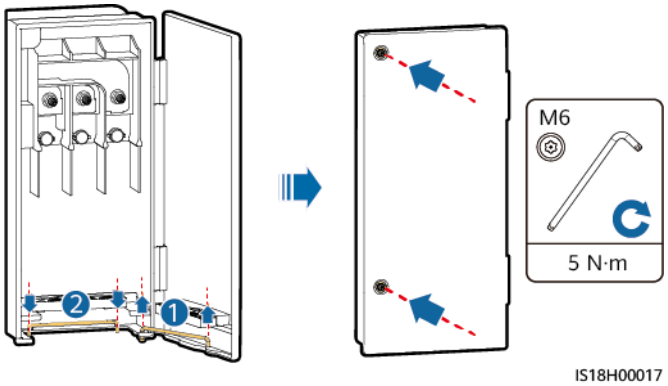

----End

5.5 Requirements for AC Power Cable Stripping Outside the Compartment

Materials

Material	Specifications	Source
Cold/Heat shrink tubing	Matches the cable and has anti-ultraviolet radiation performance.	Prepared by the customer
Three-way breakout boot	Matches the cable.	Prepared by the customer

Material	Specifications	Source
Electrical conduit	● Inner diameter ≥ 1.5 x Cable outer diameter ● Material: stainless steel pipe or PVC pipe. Steel pipes cannot be used in corrosive environments. ● Anti-ultraviolet radiation	Prepared by the customer
Sealing putty	-	Prepared by the customer

Procedure

Step 1 Strip the AC power cable. The distance between the cable stripping end and the ground must be greater than or equal to 300 mm.

Step 2 Ensure that the cable stripping end is even, wrap it with the insulation tape, and then install the three-way breakout boot and cold/heat shrink tubing.

Step 3 Crimp OT/DT terminals.

Step 4 Cut the electrical conduit to a proper length based on the actual installation height and design requirements. Ensure that the lower end of the electrical conduit is greater than or equal to 300 mm above the ground. Route the AC power cable through the electrical conduit.

Step 5 Adjust the cable and electrical conduit to be vertical. Seal the bottom of the electrical conduit with waterproofing materials. After the waterproofing measure is complete, backfill and compact the ground.

Step 6 Connect the AC power cable.

Step 7 Close the maintenance compartment door, and seal the cable inlet of the maintenance compartment and cable top outlet of the electrical conduit with fireproofing materials.

 Copyright © Huawei Technologies Co., Ltd.

NOTICE

- Waterproofing measures must be taken at the bottom of the electrical conduit. The electrical conduit and cable must be vertical. Ensure that the upper end is vertically routed into the maintenance compartment and the lower end is vertically routed into the ground.
- After the electrical conduit is routed into the ground, the underground cable must meet the bending radius requirements of the AC power cable.
- The bottom of the electrical conduit must be sealed with waterproofing materials to prevent water or moisture from entering the electrical conduit and reducing the cable insulation performance.
- Prevent stress on the inverter wiring terminals from the cable during backfilling.
- After stripping the jacket off the three-core cable, route the wires into the inverter maintenance compartment as three single-core cables. Take fireproofing and waterproofing measures at the cable inlet of the maintenance compartment to prevent water or moisture from entering the electrical conduit and reducing the cable insulation performance.
- The armored layer of the cable must be grounded according to the design requirements.
- Wires between the maintenance compartment and electrical conduit must not be exposed to the air. Protective measures must be taken.

Figure 5-13 Cable protection

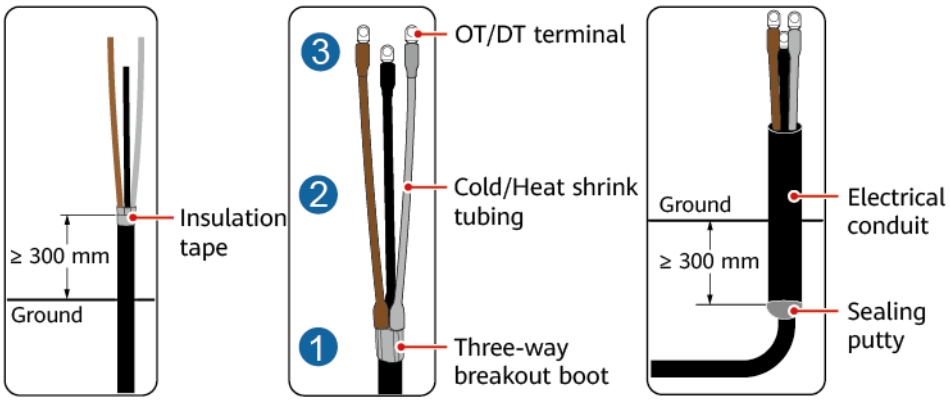

Figure 5-14 Installation completed

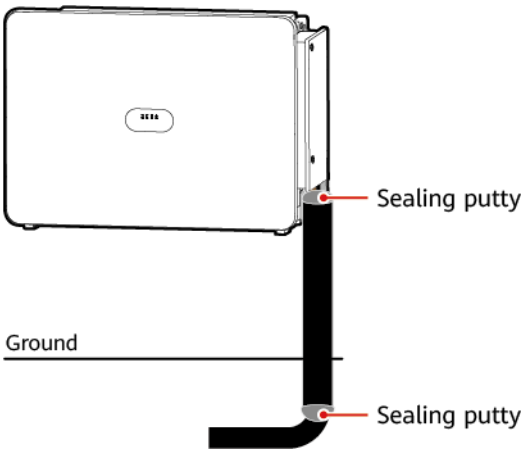

----End

5.6 Connecting DC Input Power Cables

Precautions

DANGER

- Before connecting DC input power cables, ensure that the DC voltage is within the safe range (lower than 60 V DC) and that the **AUX. SWITCH** and all **DC SWITCH** of the inverter are **OFF**. Otherwise, the high voltage may result in electric shocks.
- In the scenario where the installation is complete but the inverter is not connected to the power grid, the DC SWITCH 1 and DC SWITCH 2 must be turned on if DC input power cables are connected to the inverter. For details, see **Step 3** to **Step 5** in **7.1 Powering On the Inverter**.
- When the inverter operates in grid-tied mode, do not perform maintenance or operations on the DC input power cables, such as connecting or disconnecting a PV string or a PV module in the PV string. Otherwise, electric shocks or arcing (which may cause fire) may occur.
- For details about how to remove and insert DC input connectors, see **8.3 Power-Off for Maintenance**.

WARNING

Ensure that the following conditions are met. Otherwise, the inverter may be damaged or even a fire may occur.

- The maximum open-circuit voltage of each PV string must be lower than or equal to 1500 V DC under any circumstances.
- The polarities of electrical connections must be correct on the DC input side. The positive and negative terminals of a PV string must be connected to corresponding positive and negative DC input terminals of the inverter.

 Copyright © Huawei Technologies Co., Ltd.

WARNING

During the installation of PV strings and the inverter, the positive or negative terminals of PV strings may be short-circuited to ground if the power cables are not properly installed or routed. In this case, an AC or DC short circuit may occur and damage the inverter. The resulting device damage is not covered under any warranty.

NOTICE

- Ensure that the PV module output is well insulated to ground.
- The PV strings connecting to the same MPPT circuit shall use the same model and quantity of PV modules.
- The inverter does not support full parallel connection for PV strings (full parallel connection: PV strings connect to one another in parallel outside the inverter and then connect to it separately).
- The inverter does not support Y-branch PV connectors.

Checking the Length of Each PV String (Number of PV Modules Connected in Series)

Determine the maximum open-circuit voltage of each PV string based on the local actual irradiance and low temperature situations.

1. The maximum open-circuit voltage of each PV string must not exceed the maximum input voltage of the inverter. The upper limit of PV string length can be calculated.
2. The full-power operating voltage of each PV string (corresponding to the full-power working condition of the inverter) must be within the full-power MPPT voltage range of the inverter. The upper and lower limits of PV string length under full-power conditions can be calculated.
3. Determine an appropriate PV string length based on the upper and lower limits of PV string length calculated above.

Assume that the lowest temperature is –25°C. If common 182 mm PV modules are used, each PV string consists of about 26 PV modules when Voc is 49.9 V at STC and the capacity ratio is 1.1. If common 210 mm modules are used, each PV string consists of about 32 modules when Voc is 41.3 V at STC and the capacity ratio is 1.1.

The length of each PV string can be adjusted based on the PV module specifications and the local actual irradiance and temperature situations. The device can be put into operation only after being checked and tested by professionals.

NOTE

Voc is the open-circuit voltage. Standard test conditions (STC): irradiance 1000 W/m^2, cell temperature 25°C, and air mass 1.5

 Copyright © Huawei Technologies Co., Ltd.

Terminal Description

The inverter provides 28 DC input terminals, which are controlled by its two DC switches. DC SWITCH 1 controls the DC input terminals PV1–PV14 and DC SWITCH 2 controls the DC input terminals PV15–PV28.

Figure 5-15 DC terminals controlled by DC SWITCH 1

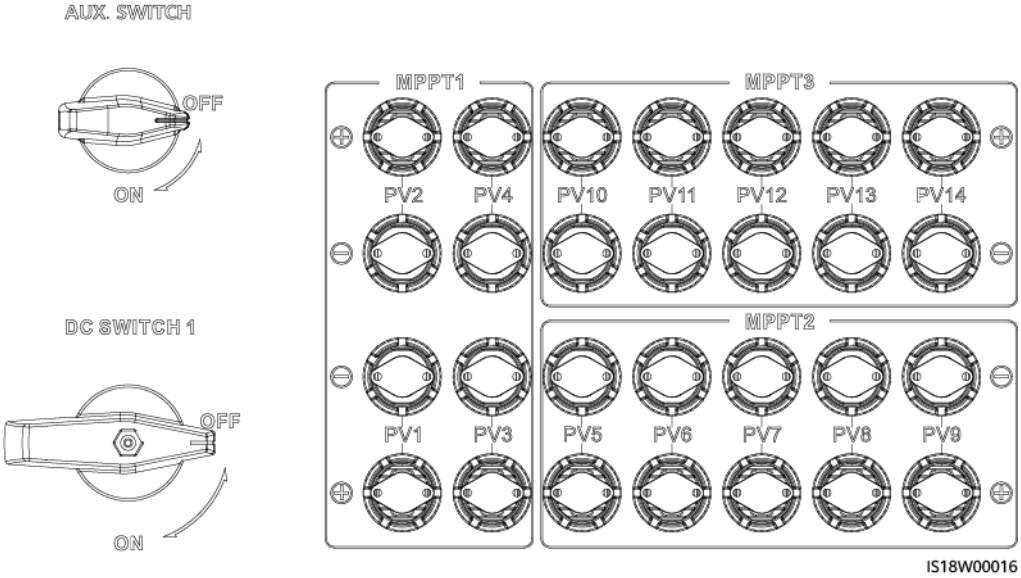

Figure 5-16 DC terminals controlled by DC SWITCH 2

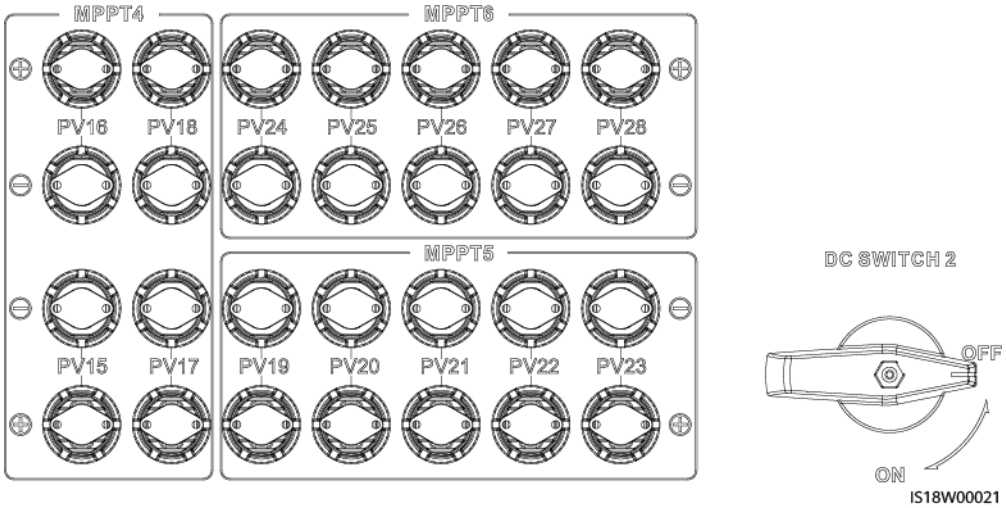

Requirements for selecting DC input terminals:

1. DC input terminal PV10 must be connected to a PV string.
2. At least one PV string is connected to the DC input terminals PV1–PV9.
3. Ensure that PV strings are evenly distributed on each MPPT. If there are 18 to 27 PV strings, connect them according to the following table.
4. If 210 mm PV modules are used, a maximum of four PV strings can be connected to each MPPT.

5. Install sealing plugs on the DC input terminals that are not connected to PV strings. For details, see **Figure 5-19**.

Number of PV Strings	Terminal Selection	Number of PV Strings	Terminal Selection
18	Connect to PV2–PV4, PV7–PV12, PV16–PV18, PV21–PV23, and PV26–PV28. 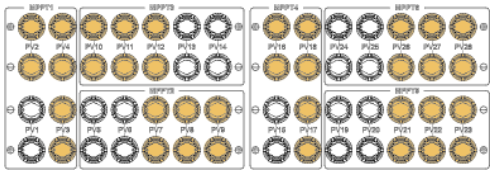	19	Connect to PV2–PV4, PV6–PV12, PV16–PV18, PV21–PV23, and PV26–PV28. 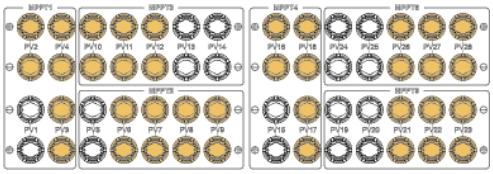
20	Connect to PV2–PV4, PV6–PV12, PV16–PV18, PV21–PV23, and PV25–PV28. 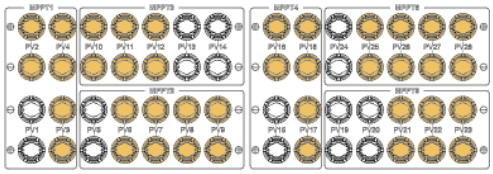	21	Connect to PV2–PV4, PV7–PV13, PV16–PV18, PV20–PV23, and PV25–PV28. 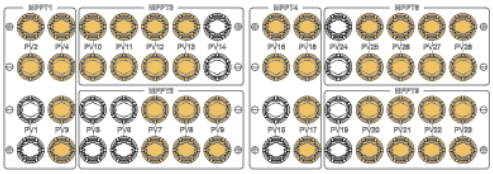
22	Connect to PV2–PV4, PV6–PV13, PV16–PV18, PV20–PV23, and PV25–PV28. 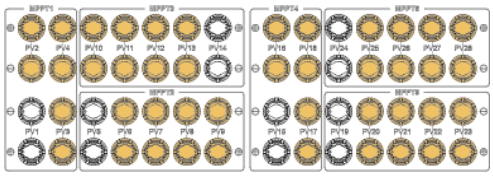	23	Connect to PV1–PV4, PV6–PV13, PV16–PV18, PV20–PV23, and PV25–PV28. 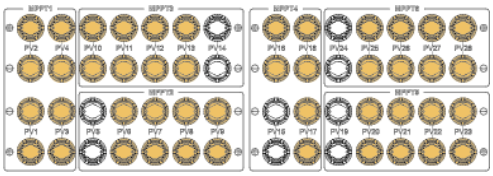
24	Connect to PV1–PV4, PV6–PV13, PV15–PV18, PV20–PV23, and PV25–PV28. 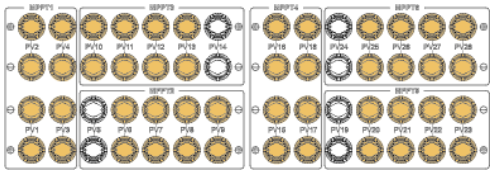	25	Connect to PV1–PV4, PV6–PV18, PV20–PV23, and PV25–PV28. 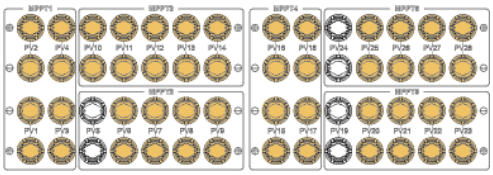
26	Connect to PV1–PV18, PV20–PV23, and PV25–PV28. 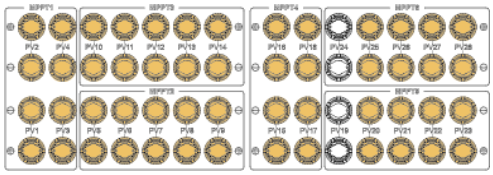	27	Connect to PV1–PV18 and PV20–PV28. 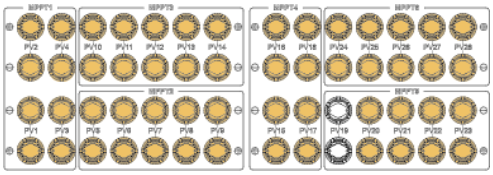

 Copyright © Huawei Technologies Co., Ltd.

Procedure

NOTICE

- For the SUN2000-250KTL-H3/280KTL-H0/300KTL-H0, use the CT75A-1T-34/CT75A-1T-35 (AVIC JONHON) PV connectors delivered with the SUN2000. If the PV connectors are lost or damaged, purchase the connectors of the same model. The device damage caused by incompatible PV connectors is not covered under any warranty.
- For the SUN2000-330KTL-H1/330KTL-H2/250KTL-H1, use the HH4SFD4TMS/HH4SMD4TMS (AMPHENOL) PV connectors delivered with the inverter. If the PV connectors are lost or damaged, purchase the connectors of the same model. The device damage caused by incompatible PV connectors is not covered under any warranty.
- AVIC JONHON and AMPHENOL PV connectors cannot be used together.
- The DC voltage measurement range of the multimeter must be at least 1500 V.
- If the voltage is a negative value, the DC input polarity is incorrect. Rectify the connection.
- If the voltage is greater than 1500 V, too many PV modules are connected to the same string. Remove some PV modules.
- Connect the connectors on the PV strings to the connectors on the inverter, and pull back the connectors on the PV strings along the axial direction to check whether the connectors are securely installed.
- Ensure that the connectors are properly connected. Any connector damage due to improper connection is not covered under any warranty.

Step 1 Before connecting PV strings to the inverter, ensure that the insulation resistance of each PV string to the ground is normal.

Test method: Use an insulation resistance tester to test the insulation resistance of the PV– cable to the ground. Add a DC voltage of more than 1500 V between the PV– cable and the ground and check the insulation resistance.

- If the insulation resistance is greater than or equal to 1 MΩ, the insulation resistance is normal.
- If the insulation resistance is less than 1 MΩ, troubleshoot the insulation fault of the cable or PV string.

 Copyright © Huawei Technologies Co., Ltd.

Figure 5-17 Testing the insulation resistance

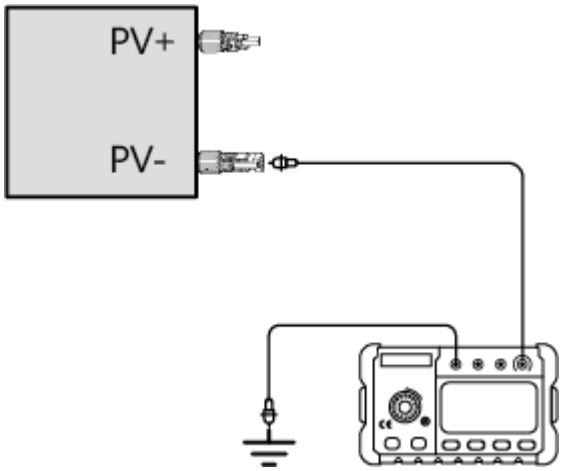

Step 2 Connect DC input power cables.

Figure 5-18 Connecting DC input power cables

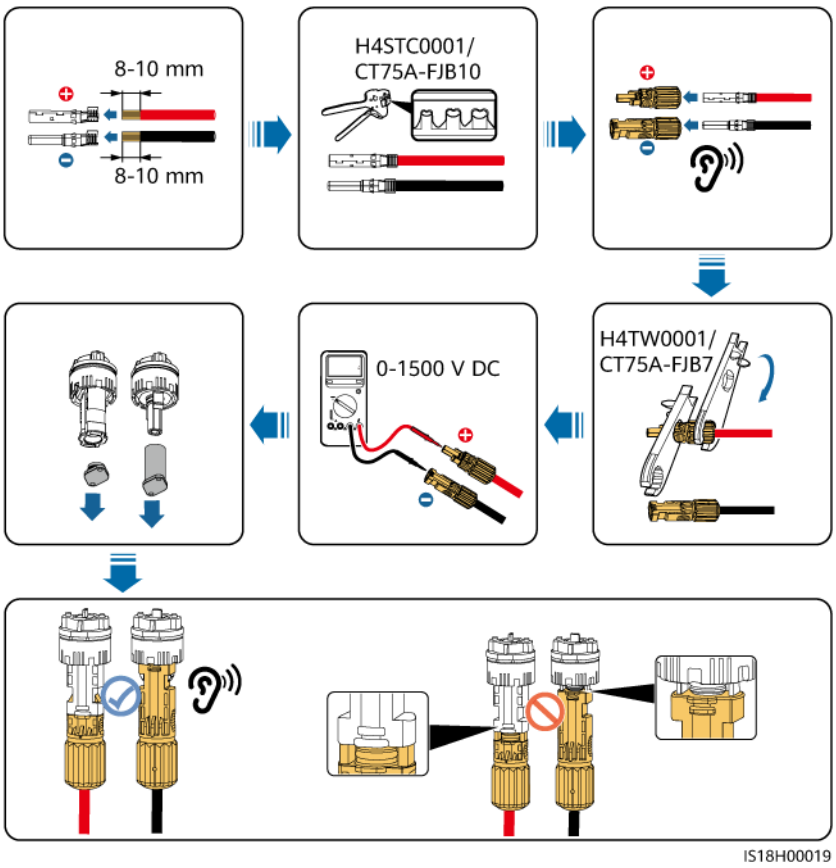

NOTICE

When installing DC input power cables, leave at least 150 mm of slack. The axial tension on PV connectors must not exceed 80 N. Radial stress or torque must not be generated on PV connectors.

Step 3 If there are DC input terminals that are not connected to PV strings, use sealing plugs with snap-fits (models: CT75A-FJB6/HY024-FHG-3 and CT75A-FJB5/HY024-FHG-4) to seal the terminals. Device damage caused by the absence of sealing plugs is not covered by warranty.

Figure 5-19 Sealing plugs with snap-fits

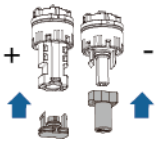

----End

5.7 Connecting Signal Cables

Precautions

When routing communications cables, separate communications cables from power cables to prevent communication from being affected.

COM Port Pin Definitions

Figure 5-20 Communications port

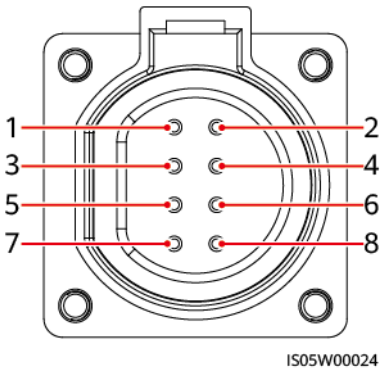

Port	Pin	Definition	Pin	Definition	Description
RS485-1	1	RS485A IN, RS485 differential signal+	2	RS485A OUT, RS485 differential signal+	Used to cascade inverters or connect devices such as the SmartLogger.
	3	RS485B IN, RS485 differential signal–	4	RS485B OUT, RS485 differential signal–	
PE	5	PE, shield layer grounding	6	PE, shield layer grounding	-
RS485-2	7	RS485A, RS485 differential signal+	8	RS485B, RS485 differential signal–	Used to connect an RS485 slave device.

 Copyright © Huawei Technologies Co., Ltd.

Procedure

Step 1 Connect the RS485 communications cables.

Figure 5-21 Connecting communications cables

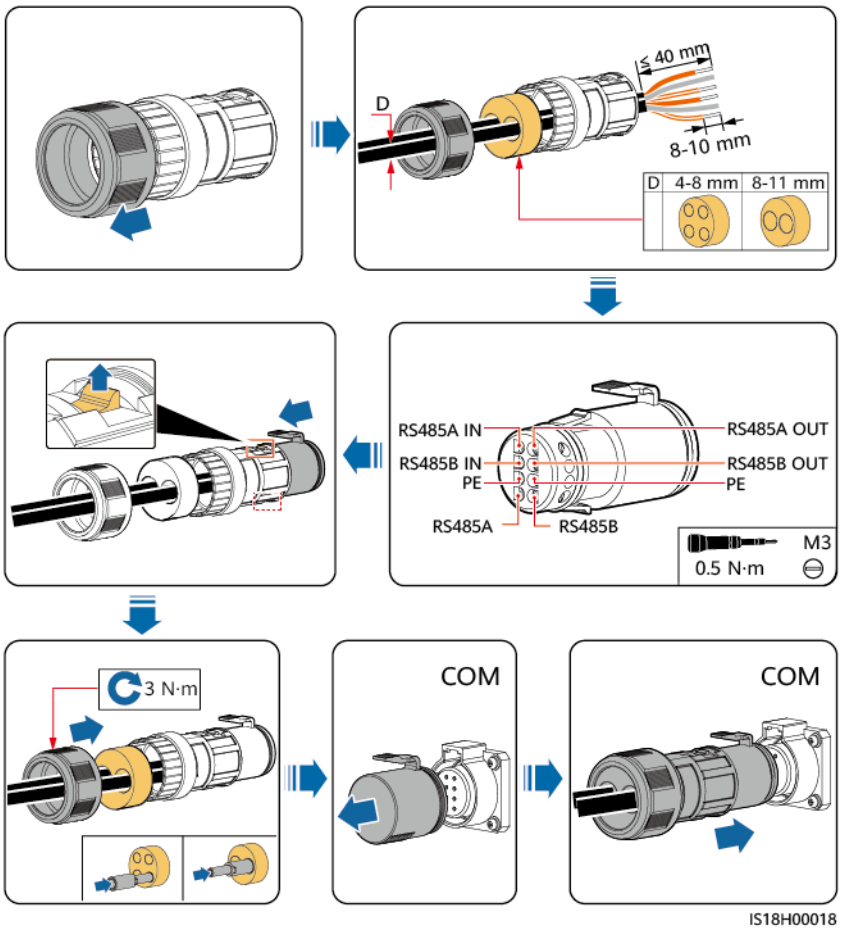

NOTICE

Use a plug to block the unused cable hole with the waterproof rubber ring, and then tighten the locking cap.

----End

6 Check Before Power-On

No.	Check Item	Acceptance Criteria
1	Overall installation	• The SUN2000 is installed correctly and securely. • The installation space is proper, and the installation environment is clean and tidy.
2	Appearance	• The SUN2000 exterior is intact without deviation, deformation, peeling paint, or rust. • Cables are intact and routed neatly.
3	Switch	The **AUX. SWITCH**, **DC SWITCH**, and downstream AC output switch are **OFF**.
4	PE cable	• The PE cable is connected correctly, securely, and reliably. • The resistance of a bond is less than 0.1 ohms.
5	AC power cable	AC power cables are connected correctly and securely.
6	Maintenance compartment	• The maintenance compartment interior is clean and tidy without foreign matter • After the check, ensure that the maintenance compartment door is closed and the screws on the door are tightened.
7	DC power cable	DC power cables are connected correctly and securely.
8	Unused port	• Unused DC terminals are sealed with sealing plugs. • Unused COM and USB ports are plugged with waterproof plugs.

 Copyright © Huawei Technologies Co., Ltd.

7 Power-On and Commissioning

7.1 Powering On the Inverter

DANGER

- Wear personal protective equipment and use dedicated insulated tools to avoid electric shocks or short circuits.

WARNING

- When the grid connection indicator is steady green (the inverter is connected to the power grid), do not turn on the DC switch. Otherwise, the inverter may be damaged because insulation resistance detection is not performed.
- When the inverter is powered on for the first time after long-term storage, it will enter an initialization phase lasting 1.5 to 3 hours. If the PV connection indicator is off during this process, this is normal. Do not turn off **DC SWITCH 1** and **DC SWITCH 2**. Otherwise, the inverter may break down.

 Copyright © Huawei Technologies Co., Ltd.

NOTICE

- Before the equipment is put into operation for the first time, ensure that the parameters are set correctly by professional personnel. Incorrect parameter settings may result in noncompliance with local grid connection requirements and affect the normal operations of the equipment.
- Before turning on the AC switch between the inverter and the grid, check that the AC voltage is within the specified range using a multimeter.
- If an inverter has not been running for six months or longer (three months or longer in the offshore scenario) after being mounted, do not connect the DC input power cables to the inverter. Connect the DC input power cables only when the inverter needs to connect to the power grid. In addition, the inverter must be checked and tested by professionals before being put into operation. If the DC input power cables are connected to the inverter, turn on **DC SWITCH 1** and **DC SWITCH 2** by referring to **Step 3** to **Step 5**. Seal unused PV connectors with sealing plugs. When the inverter allows on-grid operation, if the PV connection indicator is steady green, turn on the AC switch between the inverter and the power grid.
- Upon the first power-on, ensure that the **AUX. SWITCH** is turned on first. After the PV connection indicator is steady green and the alarm indicator is steady red, turn on **DC SWITCH 1** and **DC SWITCH 2**. After the system is successfully connected to the power grid, turn off the **AUX. SWITCH**. The Company shall not be liable for any device damage caused by operations performed in wrong sequence.
- The DC switches implement automatic disconnection. If cables are reversely connected, PV modules are not properly configured, or an internal fault occurs in the inverter, the DC switches automatically turn off for protection. In this case, rectify the fault as prompted on the app, check that the alarm is cleared, and then turn on the DC switches. If the alarm/maintenance indicator is steady red and at least one of the PV connection indicator and grid connection indicator is steady red, contact technical support after the DC switches automatically turn off and do not turn on the DC switches by yourself. Device damage caused by forcible switch-on after the DC switches turn off is not covered by the warranty.
- When the system is powered on or running, ensure that there are no obstacles in path of travel of the DC switch handles (for example, the handles are not stuck by cables or mistakenly held by hands) to ensure that the handles can move freely. Otherwise, the DC switches cannot automatically turn off.
- If you perform **Step 3** before **Step 2**, the inverter reports a **Shutdown: Fault** alarm. You can start the inverter only after the fault is automatically rectified.

Step 1 Wear proper personal protective equipment (PPE).

Step 2 Turn on the AC switch between the inverter and the power grid.

Step 3 Set the **AUX. SWITCH** at the bottom of the inverter to **ON**. When you hear a click, the switch is completely turned on. Observe the LED indicators.

Step 4 If the PV connection indicator is steady green and the alarm indicator is steady red, set **DC SWITCH 1** and **DC SWITCH 2** to **ON**. Observe the LED indicators to check the operating status of the inverter.

 Copyright © Huawei Technologies Co., Ltd.

If the PV connection indicator is off 1 minute after the inverter is powered on, do not turn on the **DC SWITCH**. Turn off the **AUX. SWITCH** immediately and check whether the input power cables are reversely connected or whether the input voltage meets the startup voltage requirements. After the fault is rectified, perform **Step 3** again. If the PV connection indicator is off, turn off the **AUX. SWITCH** and contact technical support engineers.

Step 5 If the inverter is running properly, turn off the **AUX. SWITCH**.

NOTICE

The **AUX. SWITCH** needs to be turned on only when the system is powered on for the first time and needs to be turned off during subsequent operation. If the **AUX. SWITCH** is not turned off within 2 minutes after the **DC SWITCH 1** or **DC SWITCH 2** is turned on, the inverter will report the **DC Switch Status Abnormal** alarm and the alarm indicator will blink red fast. After the **AUX. SWITCH** is turned off, the alarm will be automatically cleared.

Step 6 Set the parameters on the app or SmartLogger. For details, see **7.3 Commissioning the Inverter (Using the SmartLogger)** or the SmartLogger user manual.

Figure 7-1 Power-on

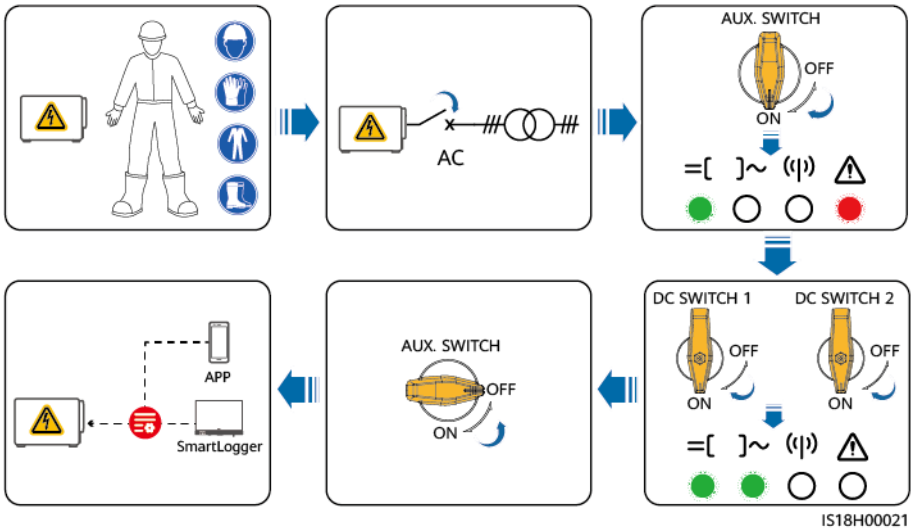

----End

7.2 Commissioning Methods and Process

The inverter can be commissioned on the SmartLogger WebUI or app. You are advised to use the SmartLogger WebUI for deployment and commissioning and use the app for password resetting and alarm viewing.

Figure 7-2 Commissioning process using the SmartLogger

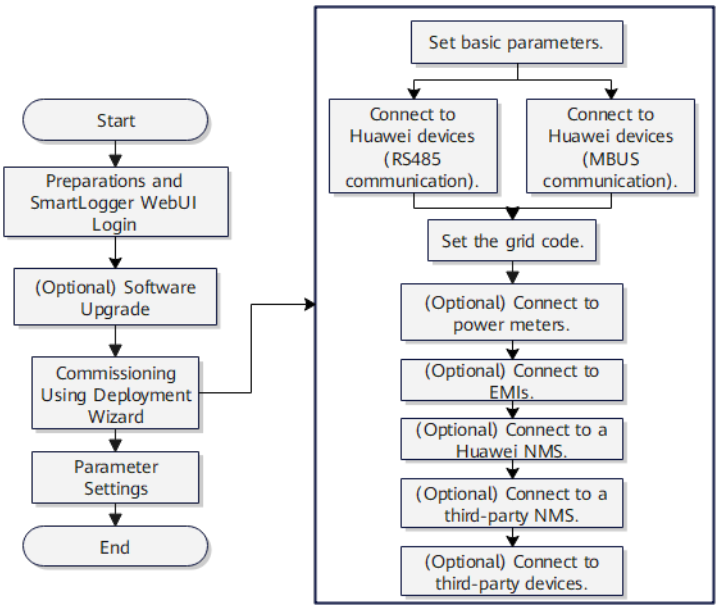

7.3 Commissioning the Inverter (Using the SmartLogger)

7.3.1 Preparations and SmartLogger WebUI Login

For details about preparations and WebUI login, see **SmartLogger3000 User Manual**.

7.3.2 Software Upgrade

For details about software upgrade, see **SmartLogger3000 User Manual**.

7.3.3 Commissioning Using Deployment Wizard

Procedure

Step 1 Set basic parameters.

Figure 7-3 Setting basic parameters

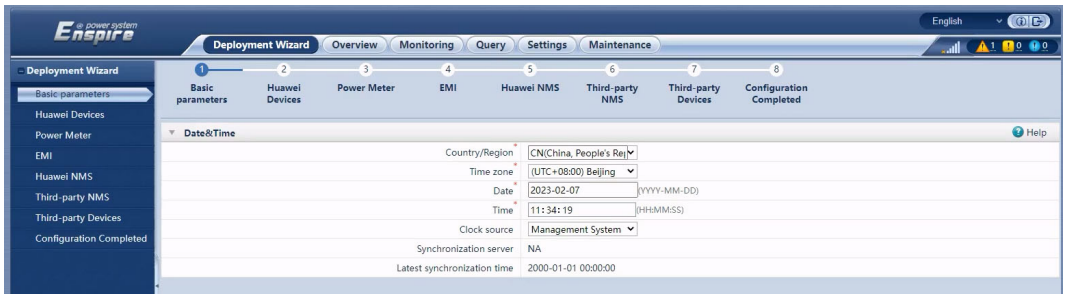

Step 2 Connect to Huawei devices.

- For RS485 communication, click **Search for Device**. The address is automatically allocated.

Figure 7-4 RS485 communication

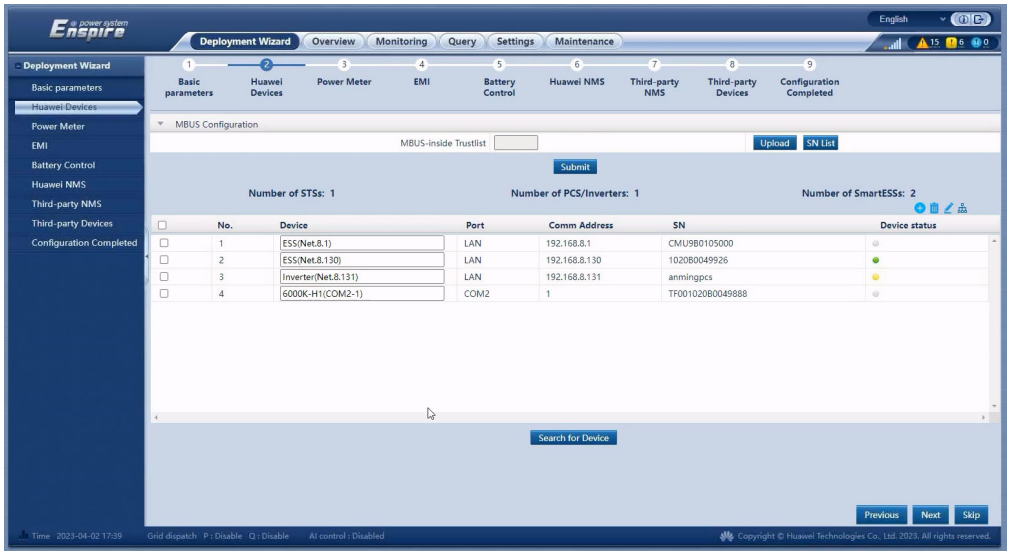

- For MBUS communication, choose **Monitoring** > **MBUS** > **Networking Settings** > **SN List** > **Template** to download the SN list template. Return to the deployment wizard, click **Upload**, and upload the configured template file.

Figure 7-5 Downloading the SN list template

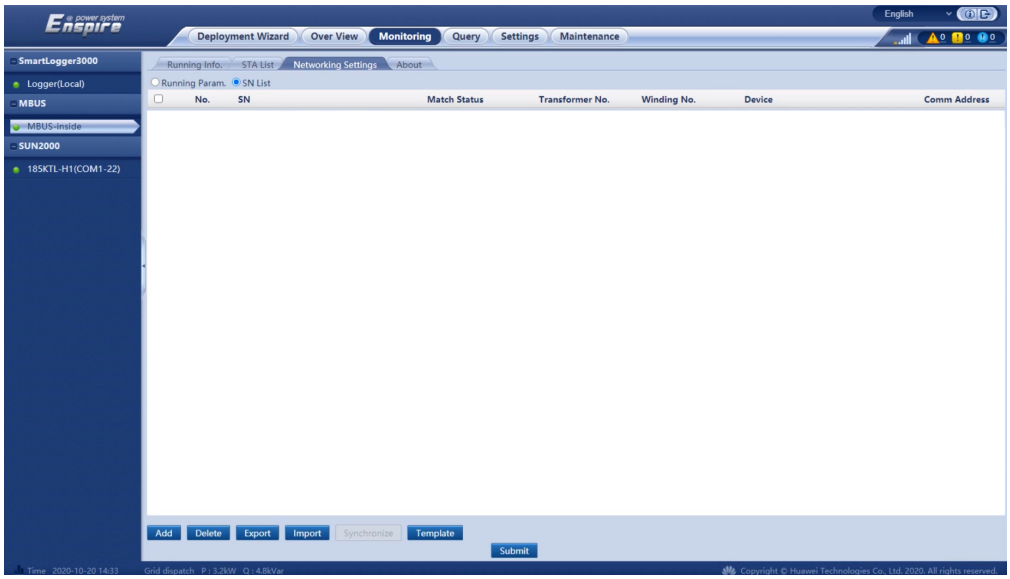

Figure 7-6 Uploading the SN list

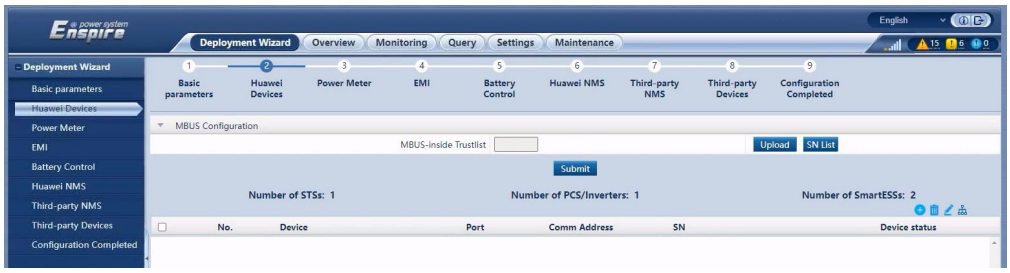

Step 3 After the device is connected, set the grid code based on the site requirements.

Figure 7-7 Setting the grid code

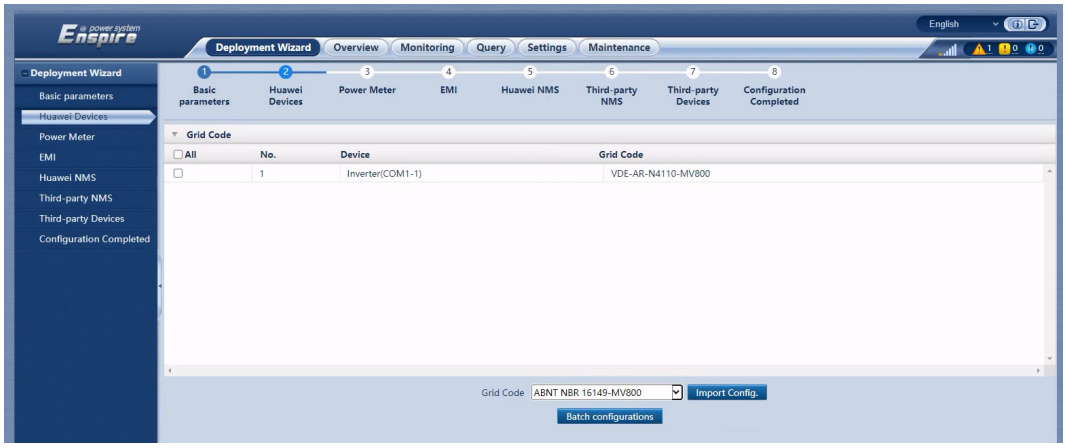

Step 4 Connect to power meters.

Set related parameters by referring to **Setting Meter Parameters** in the SmartLogger3000 User Manual.

Figure 7-8 Connecting to power meters

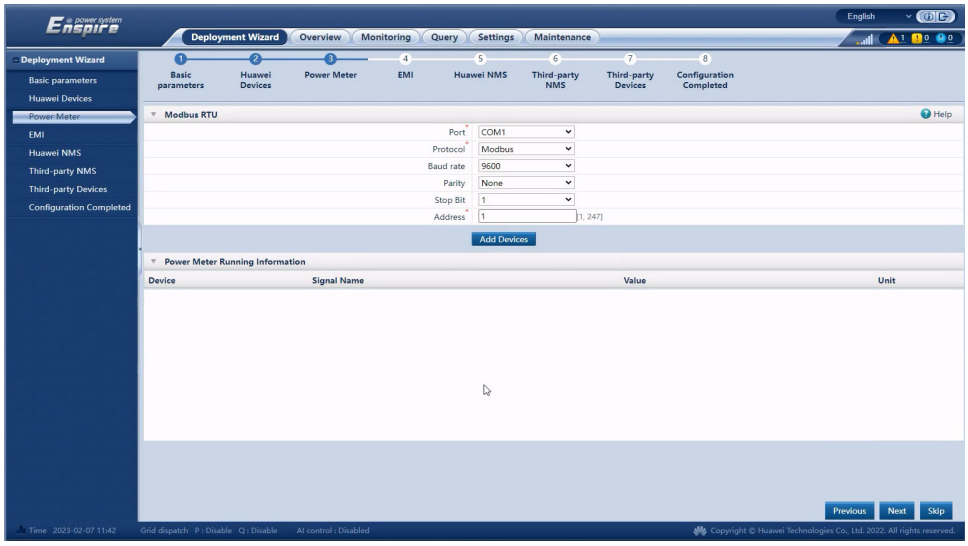

Step 5 Connect to EMIs.

Figure 7-9 Connecting to EMIs

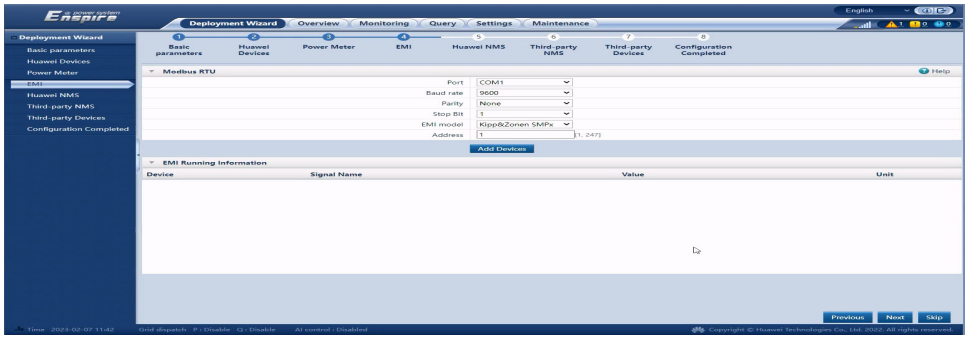

Step 6 Connect to a Huawei network management system (NMS).

Set related parameters by referring to **Setting Parameters for Connecting to the Management System** (Huawei NMS) in the SmartLogger3000 User Manual.

Figure 7-10 Connecting to a Huawei NMS

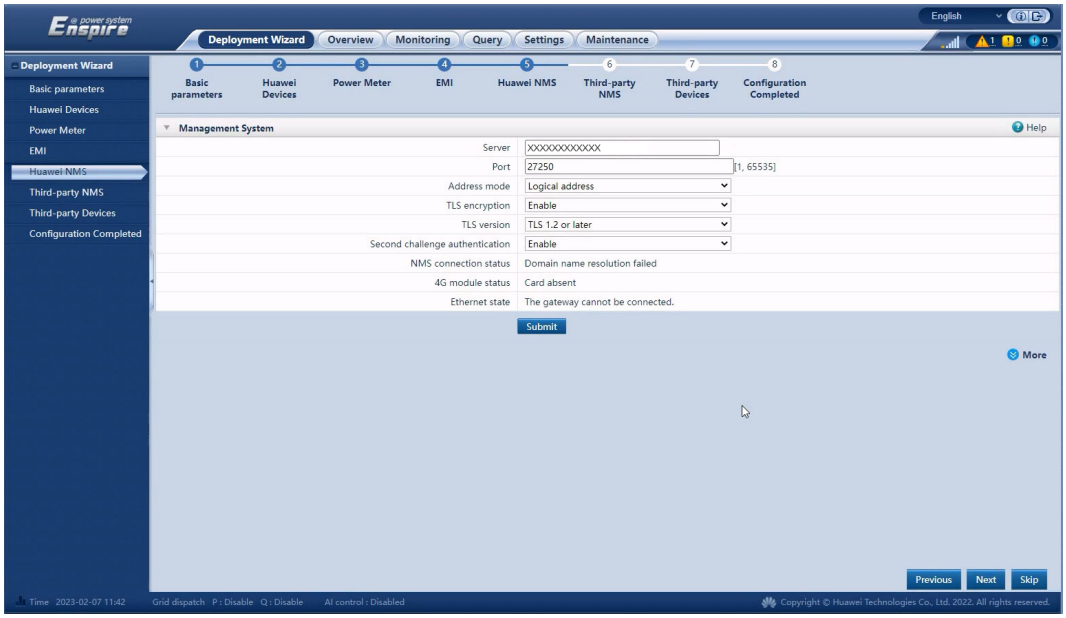

Step 7 Connect to a third-party NMS.

Set related parameters by referring to **Setting Parameters for Connecting to the Management System** (third-party NMS) in the SmartLogger3000 User Manual.

Figure 7-11 Connecting to a third-party NMS

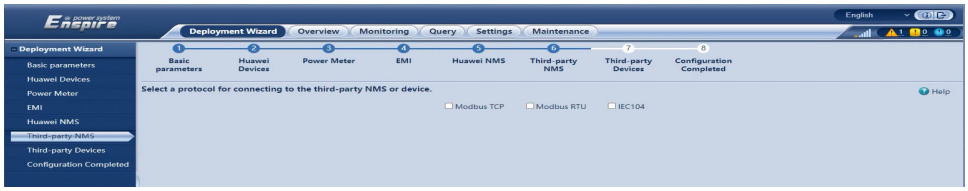

Step 8 Connect to third-party devices.

Set related parameters by referring to **Setting Custom Device Parameters** in the SmartLogger3000 User Manual.

Figure 7-12 Connecting to third-party devices

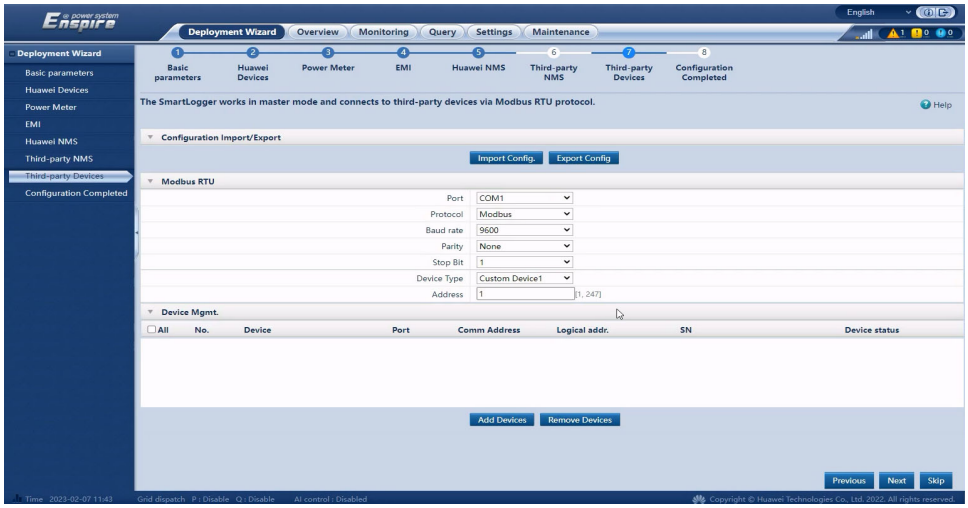

Step 9 Click **Finish**.

Figure 7-13 Completing the configuration

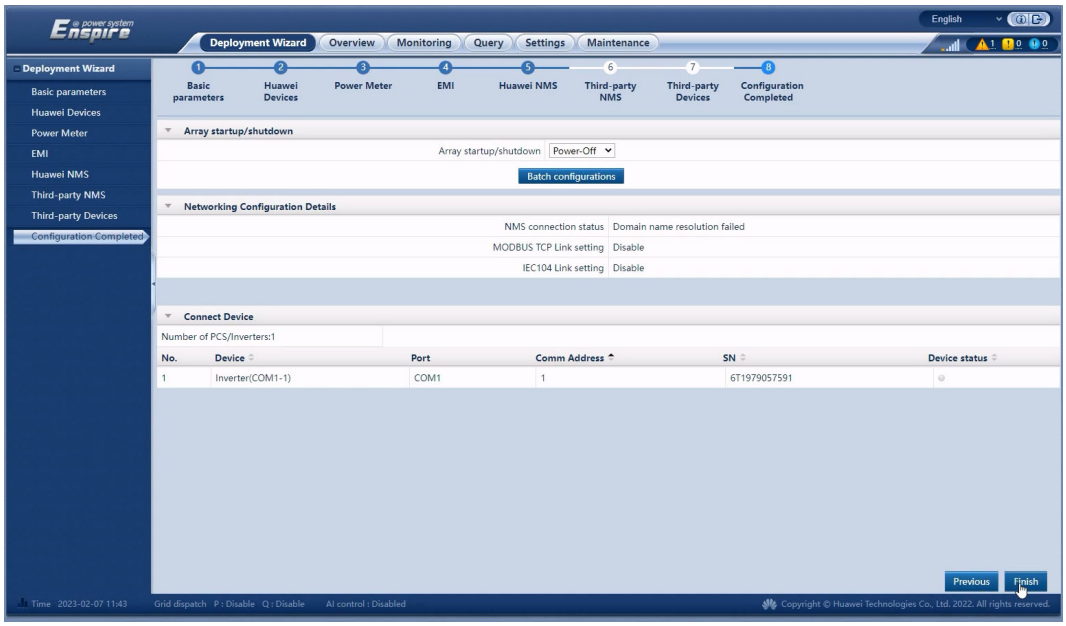

----End

7.3.4 Parameters Settings

Choose **Monitoring** > **Inverter** > **Running Param.**, set running parameters, and click **Submit**.

Figure 7-14 Setting running parameters

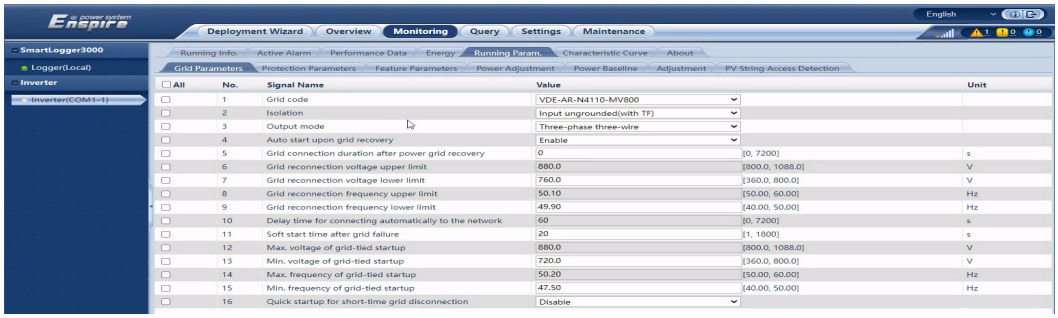

For details about the parameters, see **SmartLogger3000 User Manual**.

7.4 Commissioning the Inverter (Using the App)

You can reset a password and view alarms on the app. For details, see the app user manual.

- For details about how to reset a password, see **C Resetting Passwords**.
- To view alarms, log in to the app, choose **Alarm** > **Active alarm**, and rectify the fault based on the alarm handling suggestions.

8 System Maintenance

DANGER

- Wear personal protective equipment and use dedicated insulated tools to avoid electric shocks or short circuits.
- Do not stay in front of the inverter for a long time. Do not approach the inverter unless necessary.
- If you need to operate an inverter switch, insert or remove a USB flash drive, replace a fan, or commission the inverter, you are advised to stand beside the inverter or behind it and take safety measures in strict accordance with the requirements in the user manual.

WARNING

- Before performing maintenance, power off the equipment, follow the instructions on the delayed discharge label, and wait for a period of time as specified to ensure that the equipment is not energized.

8.1 Routine Maintenance

To ensure that the SUN2000 can operate properly for a long term, you are advised to perform routine maintenance on it as described in this section.

CAUTION

- Before cleaning the SUN2000, connecting cables, and checking the grounding reliability, power off the SUN2000 and ensure that the **AUX. SWITCH** and all **DC SWITCH** of the SUN2000 are **OFF**.
- Do not open the maintenance compartment door on rainy or snowy days. If you need to, take protective measures to prevent rain or snow from entering the maintenance compartment. If protective measures cannot be taken, do not open the maintenance compartment door.

 Copyright © Huawei Technologies Co., Ltd.

Table 8-1 Maintenance checklist

Check Item	Check Method	Maintenance Method	Maintenance Interval
Alarm	Check alarms on the app, SmartLogger, or management system.	For details, see **9 Alarm Reference**. For details about the alarm ID 2062, see **8.7 Locating Insulation Resistance Faults**.	Routine maintenance
Cleanness of air inlet and outlet	Periodically check whether there is dust or foreign objects at the air intake and exhaust vents.	Power off the SUN2000 and remove dust and foreign objects. If necessary, remove the baffle plate from the air intake vent for cleaning.	Once every 6 to 12 months (or once every 3 to 6 months based on the actual dust conditions in the environment)
Fan	Check whether the fans generate abnormal noise during operation.	Remove foreign objects from the fan. If the abnormal noise persists, replace the fan. For details, see **8.4 Replacing a Fan**.	Once every 6 to 12 months
System running status	• Check whether the SUN2000 is damaged or deformed. • Check whether the SUN2000 generates abnormal sounds during operation. • Check whether all SUN2000 parameters are correctly set during operation.	Contact the Company's service engineers.	Once every 6 months

 Copyright © Huawei Technologies Co., Ltd.

Check Item	Check Method	Maintenance Method	Maintenance Interval
Electrical connection	• Check whether cables are disconnected or loose. • Check whether cables are damaged, especially whether the cable sheath that contacts a metal surface is damaged. • Check whether the sealing plugs of unused DC input terminals fall off. • Check whether the unused COM and USB ports are locked by waterproof caps.	• Power off the SUN2000 and secure loose or disconnected cables. • Power off the SUN2000 and replace the damaged cables. • Install sealing plugs on unused DC input terminals. • Tighten the waterproof caps on the unused COM and USB ports.	6 months after the first commissioning and once every 6 to 12 months after that
Grounding reliability	Check whether the ground cables are securely grounded. Use a multimeter to check whether the ground resistance at the SUN2000 ground screws is less than or equal to 4 Ω.	Tighten the screws on both sides of the ground cable and ensure that the resistance meets the requirements.	6 months after the first commissioning and once every 6 to 12 months after that
Vegetation around the SUN2000	Check whether there are weeds around the SUN2000.	• Perform inspection and weeding as required. • Clean the site promptly after weeding.	Based on the local wilting season

Figure 8-1 Removing the baffle plate of the air intake vent

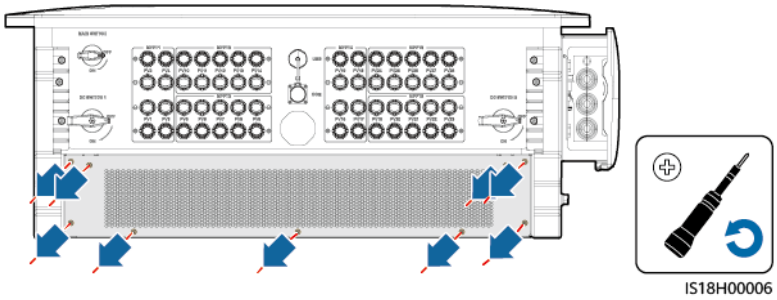

NOTICE

After the cleaning is complete, reinstall the baffle plate. Tighten the M4 screws with a torque of 1.2 N·m.

8.2 Shutdown and Power-Off

⚠ WARNING

After the system is powered off, the inverter is still energized and hot, which may cause electric shocks or burns. Therefore, wait for at least 15 minutes after inverter system power-off and wear PPE before working on the inverter.

Step 1 Send a shutdown command on the app, SmartLogger, or management system.

For details, see the user manual of the corresponding product.

Step 2 Turn off the AC switch between the inverter and the power grid.

Step 3 Set the two **DC SWITCH** to **OFF**.

----End

8.3 Power-Off for Maintenance

Precautions

To prevent personal injury and device damage, use the DC current scale of a clamp meter to measure the PV string current (even if the DC switches have been turned off) before removing PV connectors when troubleshooting or replacing the SUN2000 or PV strings. Ensure that the PV strings have no current, and quickly remove and insert connectors for adjustment.

⚠ CAUTION

- If the SUN2000 is faulty, do not stand in front of it if possible.
- If the PV connection indicator on the SUN2000 is off and the DC switches are **OFF**, do not operate the DC switches. For details, see **Step 4**.
- Do not operate the DC switches on the SUN2000 before you perform steps **Step 3** to **Step 5**.
- When the SUN2000 detects a fault, it triggers automatic DC disconnection protection. Do not turn on the DC switches before the fault is rectified.
- If the AC switch between the SUN2000 and the power grid has been turned off automatically, do not turn it on before the fault is rectified.
- Before power-off for maintenance, do not touch the energized components of the SUN2000. Otherwise, electric shocks or arcs may occur.

 Copyright © Huawei Technologies Co., Ltd.

Procedure

Step 1 Wear proper PPE.

Step 2 If the inverter does not shut down due to a fault, send a shutdown command on the app, SmartLogger, or management system. If the SUN2000 has shut down due to a fault, go to the next step.

Step 3 Turn off the AC switch between the SUN2000 and the power grid.

Step 4 Use a clamp meter to measure the DC current of each PV string input to the SUN2000.

- If the current is less than or equal to 0.01 A, go to the next step.
- If the current is higher than 0.01 A, wait until the solar irradiance decreases and the PV string current decreases below 0.01 A at night, and then go to the next step.

Step 5 Open the maintenance compartment door, install a support strut, and use a multimeter to check the voltage between the AC terminal block and the ground. Ensure that the AC side of the SUN2000 is powered off.

Step 6 Turn off all DC input switches of the SUN2000 and ensure that all switches are **OFF**. If the DC switches are automatically turned off, go to the next step.

Step 7 Wait for 15 minutes and troubleshoot or repair the SUN2000.

WARNING

If a serious fault occurs in an internal circuit of the inverter, do not stay in front of the inverter. Perform operations according to the following instructions. Improper operations may cause a fire inside the inverter or allow a serious fault to propagate, which may endanger personal safety.

- If the inverter emits abnormal smell or smoke, catches fire, or has obvious exceptions, handle the situation according to the **Smart PV Inverter Emergency Plan**.
- If the inverter does not emit abnormal smell or smoke, catch fire, or have obvious exceptions:
  - If an alarm is generated, perform operations on the faulty inverter according to the **Inverter Alarm Reference**. If any of the alarms with IDs 2064-1, 2064-10, 2064-11, 2064-12, 2064-20, 2064-29, and 2064-30 is generated, handle it first.
  - If the inverter does not generate an alarm but the AC switch trips and the DC indicator on the inverter is off, follow these instructions:
    - Ensure that the AC switch is OFF. Do not turn it on again.
    - Ensure that there are no flammable materials under the inverter.
    - Handle the inverter at night when the DC side is completely de-energized.
  - In other cases, wait for the inverter to recover automatically. If the inverter fails to recover, contact your vendor or technical support.

 Copyright © Huawei Technologies Co., Ltd.

Figure 8-2 Power-off for maintenance

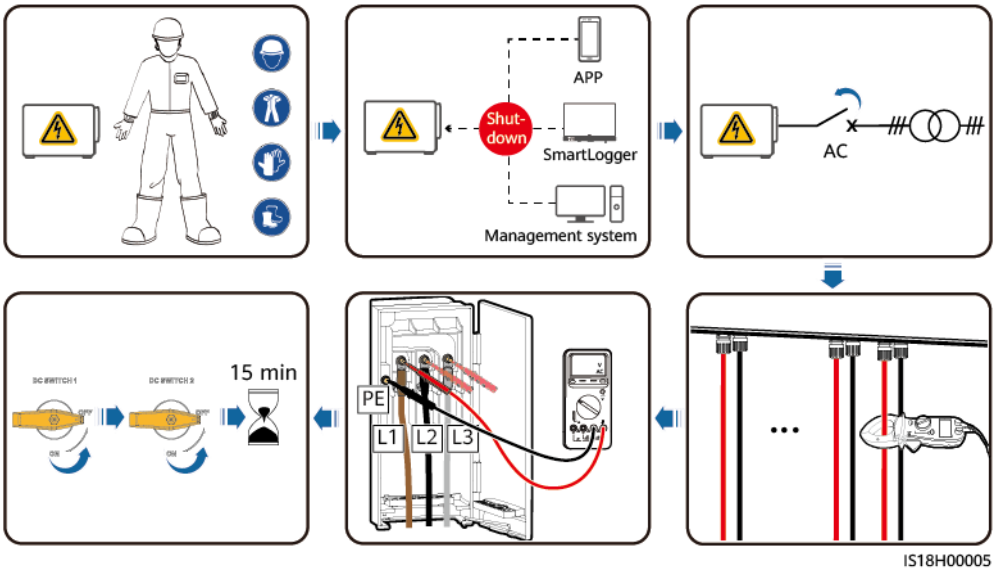

----End

8.4 Replacing a Fan

CAUTION

- Before replacing a fan, power off the SUN2000.
- When replacing a fan, use insulated tools and wear PPE.

NOTE

If the fan gets stuck when being pulled or pushed, slightly lift it.

Step 1 Remove the fan tray.

1. Remove the screws from the fan tray and store them properly.
2. Pull out the fan tray until the fan baffle plate is flush with the SUN2000 enclosure.
3. Place down the handle.
4. Unscrew the connectors.
5. Disconnect the cables.
6. Pull out the fan tray.

Figure 8-3 Pulling out the fan tray

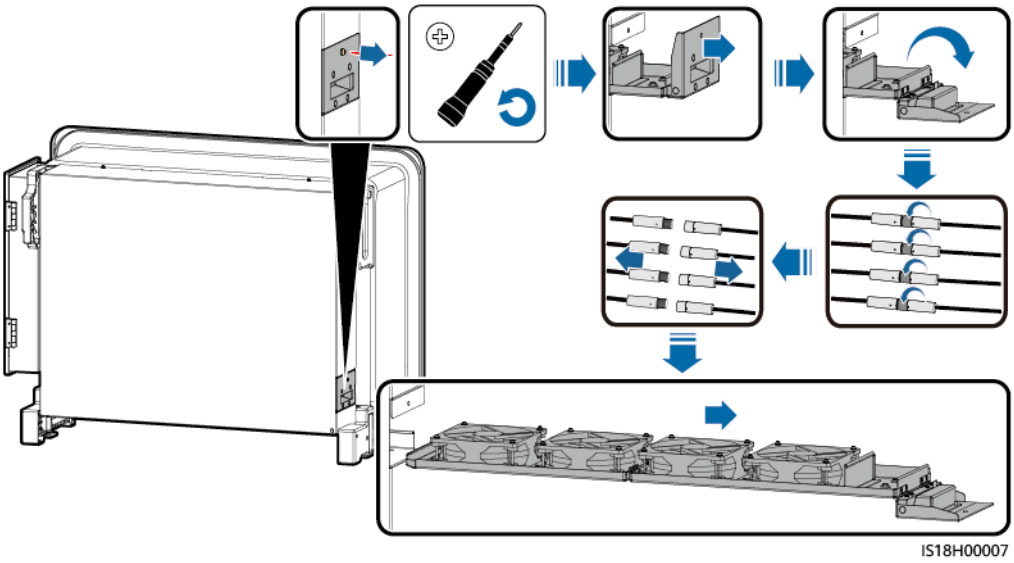

Step 2 Remove the cable ties from the faulty fan.

Figure 8-4 Removing cable ties

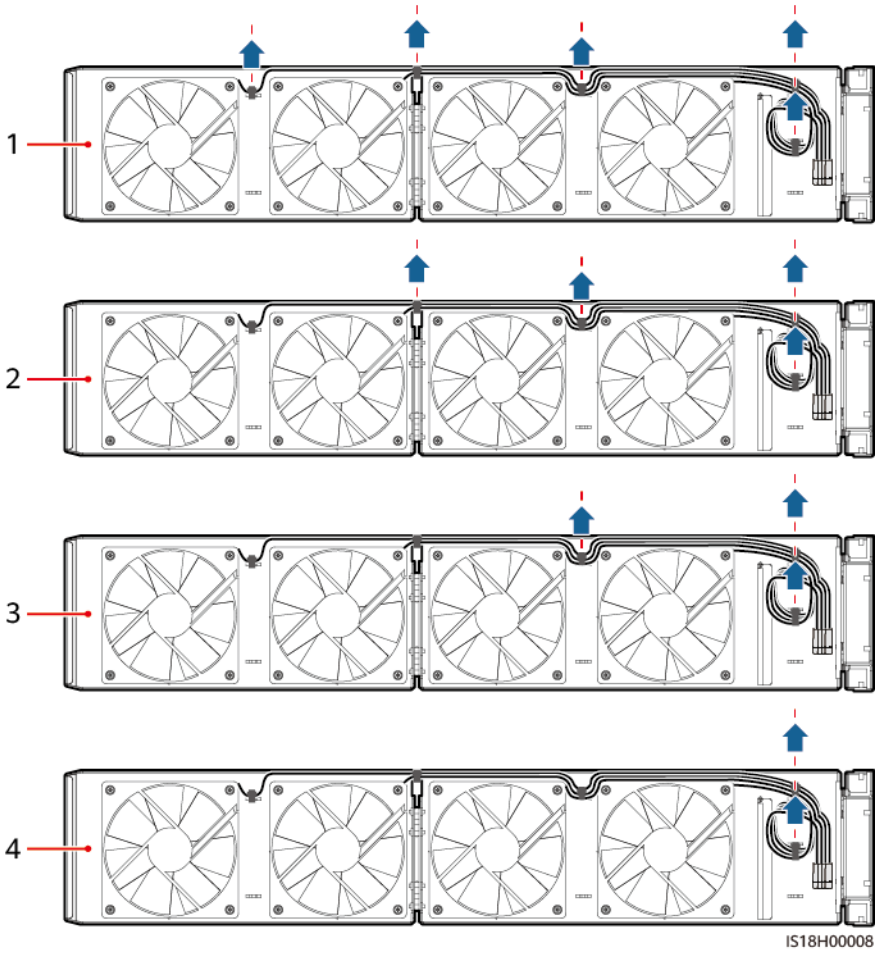

(1) Remove the cable ties from FAN 1. (2) Remove the cable ties from FAN 2.

(3) Remove the cable ties from FAN 3. (4) Remove the cable ties from FAN 4.

Step 3 Remove the faulty fan.

Figure 8-5 Removing a fan (using FAN 1 as an example)

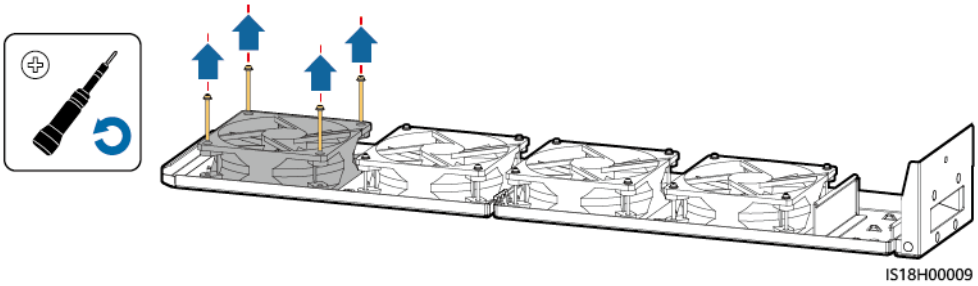

Step 4 Install a new fan.

Figure 8-6 Installing a fan (using FAN 1 as an example)

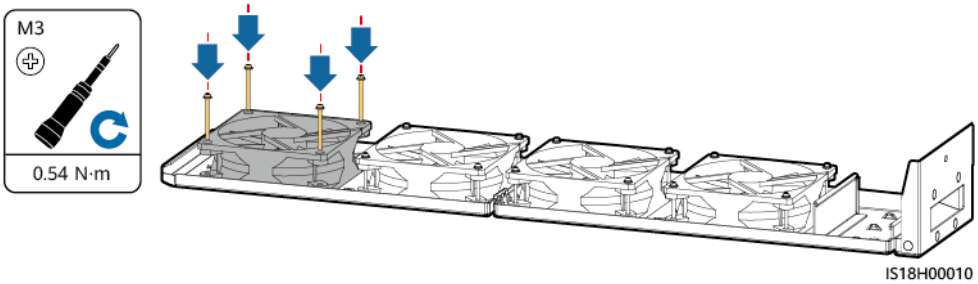

Step 5 Bind the fan cables.

Figure 8-7 Binding cables

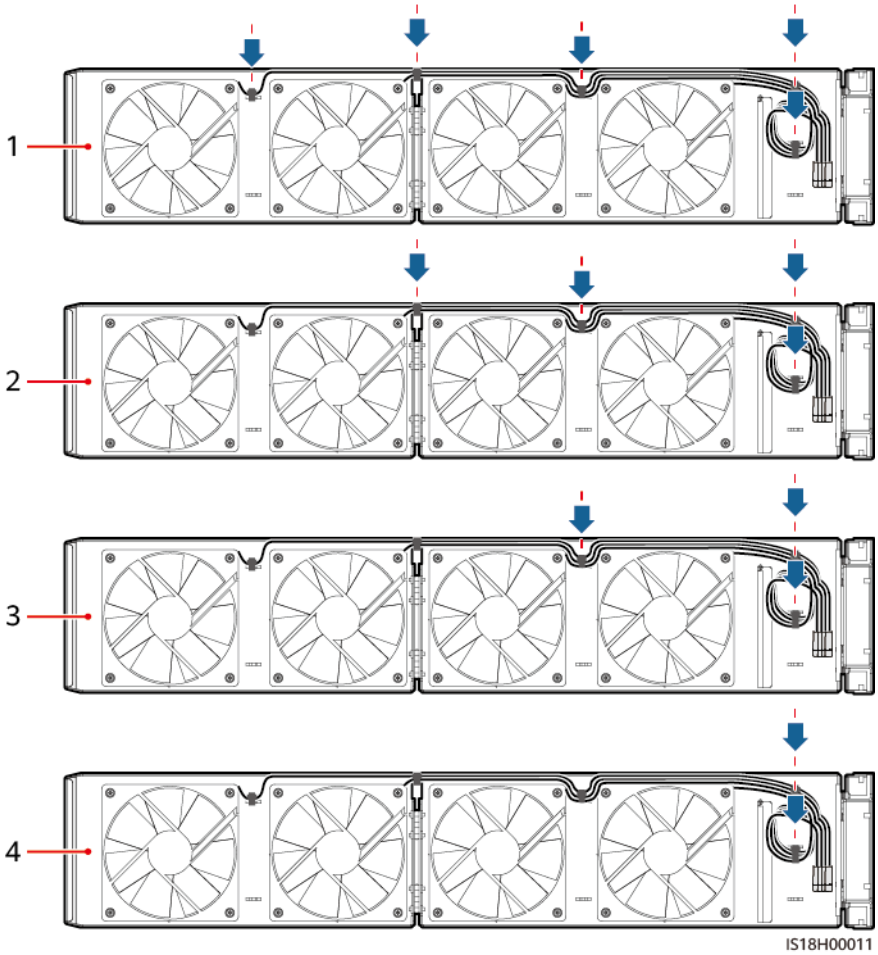

(1) Bind the cables of FAN 1.
(2) Bind the cables of FAN 2.
(3) Bind the cables of FAN 3.
(4) Bind the cables of FAN 4.

Step 6 Install the fan tray.

1. Clean the fan tray and ensure that no foreign matter is left. Align the fan tray with the installation position.
2. Push in the fan tray until the fan baffle plate is flush with the SUN2000 enclosure.
3. Connect the cables correctly according to the cable labels.
4. Rotate the handle.
5. Push the fan tray completely in place.
6. Tighten the screws on the fan tray.

 Copyright © Huawei Technologies Co., Ltd.

Figure 8-8 Installing a fan tray

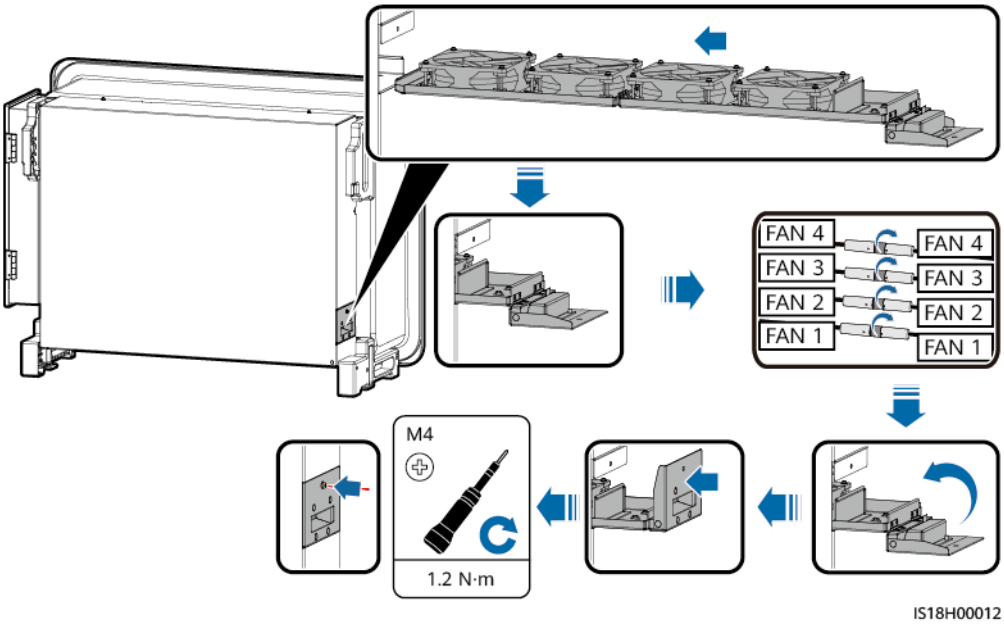

----End

8.5 Replacing the SUN2000

NOTICE

Before removing the SUN2000, disconnect both the AC and DC power supplies.

Step 1 Remove the SUN2000.

1. Disconnect all cables from the SUN2000, including RS485 communications cables, DC input power cables, AC output power cables, and protective earthing (PE) cables.
2. Remove the SUN2000 from the mounting bracket.
3. Remove the mounting bracket.

Step 2 Pack the SUN2000.

- If the original packaging is available, put the SUN2000 inside it and then seal it using adhesive tape.
- If the original packaging is unavailable, put the SUN2000 inside a suitable hard cardboard box and seal it properly.

Step 3 Dispose of the SUN2000.

NOTE

If the SUN2000 reaches the end of its service life, dispose of it according to local regulations for the disposal of electrical equipment.

 Copyright © Huawei Technologies Co., Ltd.

Step 4 Install a new SUN2000. For details, see **4 Installation** and **5 Electrical Connections**.

----End

8.6 Resetting and Turning On the DC SWITCH

Prerequisites

DANGER

- If all the DC SWITCH are automatically turned off at the same time, the AC switch does not trip, and the indicators on the inverter displays the following status, do not turn on the DC SWITCH by yourself. Contact your vendor or technical support.
  - ⎓[,]~, and ⚠ indicators are steady red.
  - ⎓[and ⚠ indicators are steady red.
- If all the DC SWITCH are automatically turned off at the same time and the AC switch trips, check that no short circuit occurs on the AC side between phases or between a phase and the ground, turn on the AC switch, export logs, and send the logs to your vendor or technical support. Rectify the fault after your vendor or technical support provides a solution. If there is any short circuit on the AC side between phases or between a phase and the ground, do not turn on the AC switch. Contact your vendor or technical support.
- If the DC SWITCH automatically turns off and the inverter generates a **String Reverse Connection**, **String Current Backfeed**, or **String Voltage High** alarm, rectify the fault based on the alarm handling suggestions. After the fault is rectified, wait for at least 3 minutes, turn the switch handle to **OFF** to complete the reset, and then turn it on.
- Before turning on a switch, ensure that all alarms have been cleared.

Procedure

Step 1 Set the DC SWITCH to OFF.

Step 2 Set the DC SWITCH to ON.

----End

8.7 Locating Insulation Resistance Faults

If the ground resistance of a PV string connected to the inverter is too low, the inverter generates a **Low insulation resistance** alarm.

The possible causes are as follows:

- A short circuit occurs between the PV array and the ground.

 Copyright © Huawei Technologies Co., Ltd.

- The ambient air of the PV array is damp and the insulation between the PV array and the ground is poor.

After the **Low insulation resistance** alarm is generated, the inverter automatically triggers insulation resistance fault location. If the fault location is successful, the location information is displayed on the **Alarm details** screen of the **Low insulation resistance** alarm on the app.

Log in to the app, choose **Alarm** > **Active alarm**, and choose **Low insulation resistance** to enter the **Alarm details** screen.

NOTE

- The positive and negative terminals of a PV string are connected to the PV+ and PV– terminals of the inverter, respectively. The 0% position corresponds to the PV– terminal, and the 100% position corresponds to the PV+ terminal. Other percentages indicate that the fault occurs on a PV module or cable in the PV string.
- Possible fault position = Total number of PV modules in a PV string x Percentage of possible short-circuit positions. For example, if a PV string consists of 14 PV modules and the percentage of the possible short-circuit position is 34%, the possible fault position is 4.76 (14 x 34%), indicating that the fault is located near PV module 4, including the adjacent PV modules and their cables. The inverter has a detection precision of ±1 PV module.
- For details about the PV strings corresponding to the MPPT that may be faulty, see Table 8-2. The fault can be located only to the MPPT level. Perform the following steps to connect the PV strings corresponding to the faulty MPPT to the inverter one by one to further locate and rectify the fault.
- When a non-short-circuit fault occurs, the possible short-circuit percentage is not displayed. If the insulation resistance is greater than 0.001 MΩ, the fault is not related to short circuit. Check all PV modules in the faulty PV string one by one to locate and rectify the fault.

Figure 8-9 Definition of the percentage of the short-circuit position

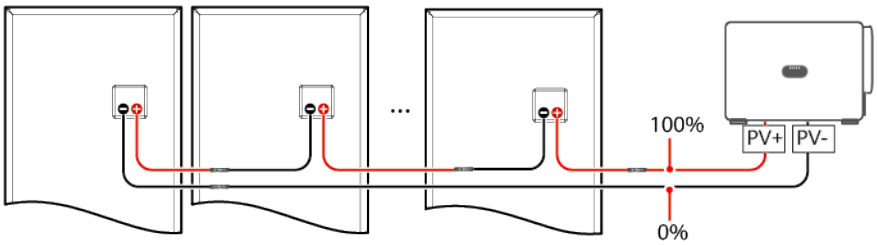

Table 8-2 Mapping between MPPTs and PV strings

MPPTn	PV String	MPPTn	PV String
MPPT1	PV1–PV4	MPPT2	PV5–PV9
MPPT3	PV10–PV14	MPPT4	PV15–PV18
MPPT5	PV19–PV23	MPPT6	PV24–PV28

 Copyright © Huawei Technologies Co., Ltd.

Procedure

NOTICE

If the irradiance or the PV string voltage is too high, the insulation resistance fault location may fail. In this case, the fault location status on the **Alarm details** screen is **Conditions not met**. Perform the following steps to connect PV strings to the inverter one by one to locate the fault.

Step 1 Ensure that the AC connections are normal. Log in to the app, choose **Maintenance** > **Inverter ON/OFF** on the home screen, and send a shutdown command. Set the **DC SWITCH** of the inverter to **OFF**.

Step 2 Connect a PV string to the inverter and set the **DC SWITCH** to **ON**. If the inverter status is **Shutdown: Command**, choose **Maintenance** > **Inverter ON/OFF** on the home screen and send a startup command.

Step 3 Choose **Alarm** on the home screen, enter the **Active alarm** screen, and check whether a **Low insulation resistance** alarm is reported.

- If no **Low insulation resistance** alarm is reported 1 minute after the DC side is powered on, choose **Maintenance** > **Inverter ON/OFF** on the home screen and send a shutdown command. Set the **DC SWITCH** to **OFF**. Go to **Step 2** and check the other PV strings one by one.
- If a **Low insulation resistance** alarm is reported 1 minute after the DC side is powered on, check the percentage of possible short-circuit positions on the **Alarm details** screen and calculate the location of the possibly faulty PV module based on the percentage. Then go to **Step 4**.

Step 4 Choose **Maintenance** > **Inverter ON/OFF** on the home screen and send a shutdown command. Set the **DC SWITCH** to **OFF**. Check whether the connectors or DC power cables between the possibly faulty PV modules and adjacent PV modules are damaged.

- If yes, replace the damaged connectors or DC power cables and then set the **DC SWITCH** to **ON**. If the inverter status is **Shutdown: Command**, choose **Maintenance** > **Inverter ON/OFF** on the home screen and send a startup command. View alarm information.
  - If no **Low insulation resistance** alarm is reported 1 minute after the DC side is powered on, the insulation resistance fault location of the PV string is complete. Choose **Maintenance** > **Inverter ON/OFF** on the home screen and send a shutdown command. Set the **DC SWITCH** to **OFF**. Go to **Step 2** and check the other PV strings one by one. Then, go to **Step 7**.
  - If the **Low insulation resistance** alarm is still reported 1 minute after the DC side is powered on, choose **Maintenance** > **Inverter ON/OFF** on the home screen and send a shutdown command. Set the **DC SWITCH** to **OFF** and go to **Step 5**.
- If no, go to **Step 5**.

Step 5 Disconnect the possibly faulty PV module from the PV string, and use a DC extension cable with MC4 connectors to connect the adjacent PV modules. Set the **DC SWITCH** to **ON**. If the inverter status is **Shutdown: Command**, choose

 Copyright © Huawei Technologies Co., Ltd.

Maintenance > **Inverter ON/OFF** on the home screen and send a startup command. View alarm information.

- If no **Low insulation resistance** alarm is reported 1 minute after the DC side is powered on, the fault occurred on the disconnected PV module. Choose **Maintenance** > **Inverter ON/OFF** on the home screen, send a shutdown command, and set the **DC SWITCH** to **OFF**. Go to **Step 7**.
- If the **Low insulation resistance** alarm is still reported 1 minute after the DC side is powered on, the fault did not occur on the disconnected PV module. Go to **Step 6**.

Step 6 Choose **Maintenance** > **Inverter ON/OFF** on the home screen and send a shutdown command. Set the **DC SWITCH** to **OFF**, reconnect the disconnected PV module, and repeat **Step 5** to check the adjacent PV modules at the possible fault position.

Step 7 Set the **DC SWITCH** to **ON**. If the inverter status is **Shutdown: Command**, choose **Maintenance** > **Inverter ON/OFF** on the home screen and send a startup command.

----End

8.8 Insulation Resistance Inspection During Reactive Power Output at Night

The inverter supports insulation resistance detection:

- If reactive power output at night is enabled for the inverter, log in to the SmartLogger WebUI, choose **Monitoring** > **Inverter** > **Running Parameters** > **Power Adjustment** and set **Insulation resistance inspection during reactive power output at night** to **Enable**. Then, the inverter will perform insulation resistance detection once a day. (This parameter can be set only for SUN2000HA V500R023C00SPC110, SmartLogger V300R023C10SPC550, and later versions.)
- If reactive power output at night is disabled, the inverter performs insulation resistance detection by default when it is started.

 Copyright © Huawei Technologies Co., Ltd.

9 Alarm Reference

For details about alarms, see **Inverter Alarm Reference**.

 Copyright © Huawei Technologies Co., Ltd.

10 Technical Specifications

Efficiency

Item	SUN2000-250KTL-H3	SUN2000-280KTL-H0	SUN2000-300KTL-H0	SUN2000-330KTL-H1	SUN2000-330KTL-H2	SUN2000-250KTL-H1
Maximum efficiency	99.01%	99.01%	99.01%	99.01%	99.01%	99.01%
Chinese efficiency	98.52%	98.52%	98.52%	-	-	-
European efficiency	-	-	-	98.8%	98.8%	98.8%

Input

Item	SUN2000-250KTL-H3	SUN2000-280KTL-H0	SUN2000-300KTL-H0	SUN2000-330KTL-H1	SUN2000-330KTL-H2	SUN2000-250KTL-H1
Maximum input voltage	1500 V	1500 V	1500 V	1500 V	1500 V	1500 V
Maximum input current (per MPPT)	65 A/70 A (subject to the nameplate)	65 A	65 A/70 A (subject to the nameplate)	65 A	65 A	65 A

 Copyright © Huawei Technologies Co., Ltd.

Item	SUN2000-250KTL-H3	SUN2000-280KTL-H0	SUN2000-300KTL-H0	SUN2000-330KTL-H1	SUN2000-330KTL-H2	SUN2000-250KTL-H1
Maximum short-circuit current (per MPPT)	115 A	115 A	115 A	115 A	115 A	115 A
Minimum operating voltage/startup voltage	500 V/550 V	500 V/550 V	500 V/550 V	500 V/550 V	500 V/550 V	500 V/550 V
MPPT voltage range	500–1500 V	500–1500 V	500–1500 V	500–1500 V	500–1500 V	500–1500 V
Full-power MPPT voltage range	930–1300 V	930–1300 V	930–1300 V	930–1300 V	930–1300 V	930–1300 V
Rated input voltage	1080 V	1080 V	1080 V	1080 V	1080 V	1080 V
Number of inputs	28	28	28	28	28	28
Number of MPPT circuits	6	6	6	6	6	6

Output

Item	SUN2000-250KTL-H3	SUN2000-280KTL-H0	SUN2000-300KTL-H0	SUN2000-330KTL-H1	SUN2000-330KTL-H2	SUN2000-250KTL-H1
Rated output power	250 kW	280 kW	300 kW	300 kW	275 kW	250 kW
Maximum apparent power	275 kVA	308 kVA	330 kVA	330 kVA	330 kVA	275 kVA

 Copyright © Huawei Technologies Co., Ltd.

Item	SUN2000-250KTL-H3	SUN2000-280KTL-H0	SUN2000-300KTL-H0	SUN2000-330KTL-H1	SUN2000-330KTL-H2	SUN2000-250KTL-H1
Maximum active power (cosϕ = 1)	275 kW	308 kW	330 kW	330 kW	330 kW	275 kW
Rated output voltage	800 V AC, 3W +PE	800 V AC, 3W +PE	800 V AC, 3W +PE	800 V AC, 3W +PE	800 V AC, 3W +PE	800 V AC, 3W +PE
Rated output current	180.5 A	202.1 A	216.6 A	216.6 A	198.5 A	180.5 A
Supported power grid frequency	50 Hz	50 Hz	50 Hz	50 Hz/60 Hz	50 Hz/60 Hz	50 Hz/60 Hz
Maximum output current	198.5 A	222.3 A	238.2 A	238.2 A	238.2 A	198.5 A
Power factor	0.8 leading to 0.8 lagging	0.8 leading to 0.8 lagging	0.8 leading to 0.8 lagging	0.8 leading to 0.8 lagging	0.8 leading to 0.8 lagging	0.8 leading to 0.8 lagging
Maximum total harmonic distortion (rated power)	< 1%	< 1%	< 1%	< 1%	< 1%	< 1%

Protection

Item	SUN2000-250KTL-H3	SUN2000-280KTL-H0	SUN2000-300KTL-H0	SUN2000-330KTL-H1	SUN2000-330KTL-H2	SUN2000-250KTL-H1
Input DC switch	Supported	Supported	Supported	Supported	Supported	Supported
Anti-islanding protection	Supported	Supported	Supported	Supported	Supported	Supported

 Copyright © Huawei Technologies Co., Ltd.

Item	SUN2000-250KTL-H3	SUN2000-280KTL-H0	SUN2000-300KTL-H0	SUN2000-330KTL-H1	SUN2000-330KTL-H2	SUN2000-250KTL-H1
Output overcurrent protection	Supported	Supported	Supported	Supported	Supported	Supported
Input reverse connection protection	Supported	Supported	Supported	Supported	Supported	Supported
PV string fault detection	Supported	Supported	Supported	Supported	Supported	Supported
DC surge protection	Type II	Type II	Type II	Type II	Type II	Type II
AC surge protection	Type II	Type II	Type II	Type II	Type II	Type II
Insulation resistance detection	Supported	Supported	Supported	Supported	Supported	Supported
Residual current monitoring unit (RCMU)	Supported	Supported	Supported	Supported	Supported	Supported

Typical Noise Value

Item	SUN2000-250KTL-H3	SUN2000-280KTL-H0	SUN2000-300KTL-H0	SUN2000-330KTL-H1	SUN2000-330KTL-H2	SUN2000-250KTL-H1
Typical noise value	75 dB(A)	75 dB(A)	75 dB(A)	75 dB(A)	75 dB(A)	75 dB(A)

 Copyright © Huawei Technologies Co., Ltd.

NOTE

- The typical noise value is the test result obtained under typical working conditions in a lab. To avoid complaints, do not install the inverter in a noise-sensitive area.
- The typical working conditions are as follows: room temperature 25°C; rated input voltage 1080 V DC, rated output voltage 800 V AC/50 Hz; rated power, and grid voltage THDu ≤ 0.5%.

Display and Communication

Item	SUN2000-250KTL-H3	SUN2000-280KTL-H0	SUN2000-300KTL-H0	SUN2000-330KTL-H1	SUN2000-330KTL-H2	SUN2000-250KTL-H1
Display	LED indicators	LED indicators	LED indicators	LED indicators	LED indicators	LED indicators
RS485	Supported	Supported	Supported	Supported	Supported	Supported
MBUS	Supported	Supported	Supported	Supported	Supported	Supported
USB	Supported	Supported	Supported	Supported	Supported	Supported

General Specifications

Item	SUN2000-250KTL-H3	SUN2000-280KTL-H0	SUN2000-300KTL-H0	SUN2000-330KTL-H1	SUN2000-330KTL-H2	SUN2000-250KTL-H1
Dimensions (W x H x D)	1048 mm x 732 mm x 395 mm	1048 mm x 732 mm x 395 mm	1048 mm x 732 mm x 395 mm	1048 mm x 732 mm x 395 mm	1048 mm x 732 mm x 395 mm	1048 mm x 732 mm x 395 mm
Net weight	112 kg	112 kg	112 kg	112 kg	112 kg	112 kg
Operating temperature	–30°C to +60°C	–30°C to +60°C	–30°C to +60°C	–25°C to +60°C	–25°C to +60°C	–25°C to +60°C
Cooling mode	Smart air cooling	Smart air cooling	Smart air cooling	Smart air cooling	Smart air cooling	Smart air cooling

 Copyright © Huawei Technologies Co., Ltd.

Item	SUN2000-250KTL-H3	SUN2000-280KTL-H0	SUN2000-300KTL-H0	SUN2000-330KTL-H1	SUN2000-330KTL-H2	SUN2000-250KTL-H1
Maximum operating altitude	5000 m (derated when the altitude is greater than 4000 m)	5000 m (derated when the altitude is greater than 4000 m)	5000 m (derated when the altitude is greater than 4000 m)	5000 m (derated when the altitude is greater than 4000 m)	5000 m (derated when the altitude is greater than 4000 m)	5000 m (derated when the altitude is greater than 4000 m)
Relative humidity	0%–100% RH	0%–100% RH	0%–100% RH	0%–100% RH	0%–100% RH	0%–100% RH
Input terminal	CT75A-1T-34/CT75A-1T-35 (AVIC JONHON)	CT75A-1T-34/CT75A-1T-35 (AVIC JONHON)	CT75A-1T-34/CT75A-1T-35 (AVIC JONHON)	HH4SFD4TMS/HH4SMD4TMS	HH4SFD4TMS/HH4SMD4TMS	HH4SFD4TMS/HH4SMD4TMS
Output terminal	Waterproof terminal+OT/DT terminal	Waterproof terminal+OT/DT terminal	Waterproof terminal+OT/DT terminal	Waterproof terminal+OT/DT terminal	Waterproof terminal+OT/DT terminal	Waterproof terminal+OT/DT terminal
IP rating	IP66	IP66	IP66	IP66	IP66	IP66
Self-consumption at night (sleep mode)	4.8 W	4.8 W	4.8 W	4.8 W	4.8 W	4.8 W

 Copyright © Huawei Technologies Co., Ltd.

A Crimping an OT or DT Terminal

Requirements on an OT or DT Terminal

- If a copper cable is used, use copper wiring terminals.
- If a copper-clad aluminum cable is used, use copper wiring terminals.
- If an aluminum alloy cable is used, use copper-to-aluminum wiring terminals, or aluminum wiring terminals along with copper-to-aluminum washers.

NOTICE

- Do not connect aluminum wiring terminals to the terminal block. Otherwise electrochemical corrosion may occur, affecting the reliability of cable connections.
- Comply with the IEC 61238-1 requirements when using copper-to-aluminum wiring terminals, or aluminum wiring terminals along with copper-to-aluminum washers.
- Do not mix up the aluminum and copper sides of a copper-to-aluminum washer. Ensure that the aluminum side of the washer contacts the aluminum wiring terminal, and that the copper side contacts the terminal block.

 Copyright © Huawei Technologies Co., Ltd.

Figure A-1 Requirements on an OT or DT terminal

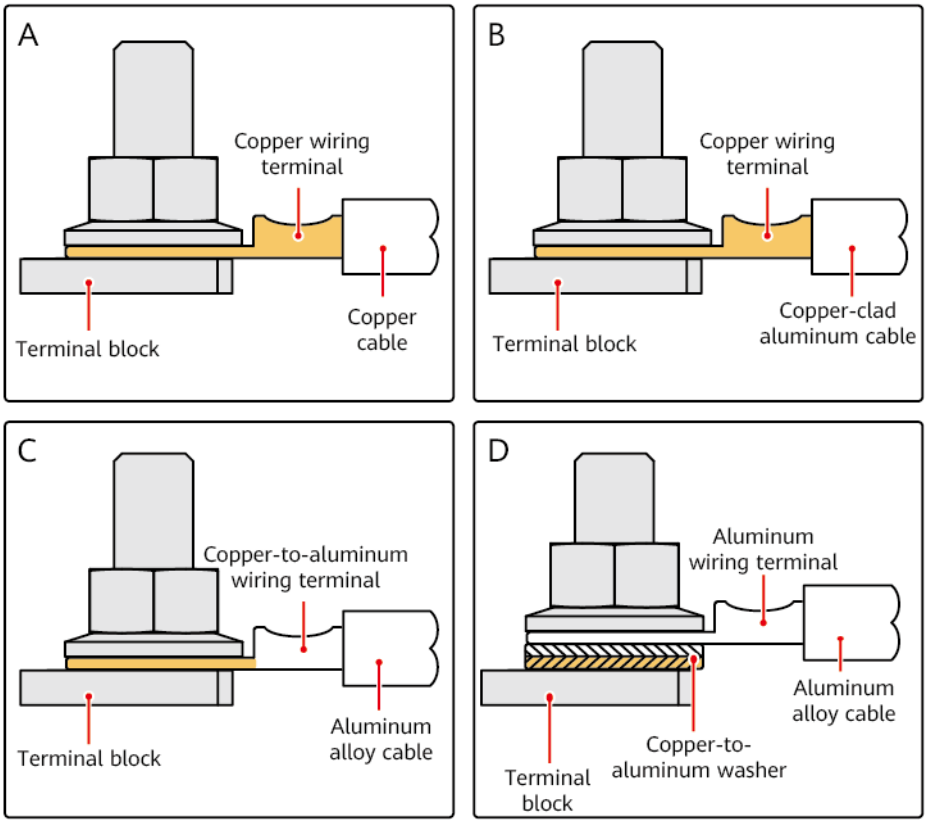

Crimping an OT or DT Terminal

NOTICE

- Avoid scratching the core wire when stripping a cable.
- The cavity formed after the conductor crimp strip of the OT or DT terminal has been crimped must wrap around the core wire completely. The core wire must make close contact with the OT or DT terminal.
- Wrap the wire crimping area with heat shrink tubing, cold shrink tubing, or insulation tape. The heat shrink tubing is used as an example.
- Use a heat gun carefully to avoid heat damage to the equipment.

 Copyright © Huawei Technologies Co., Ltd.

Figure A-2 Crimping an OT terminal

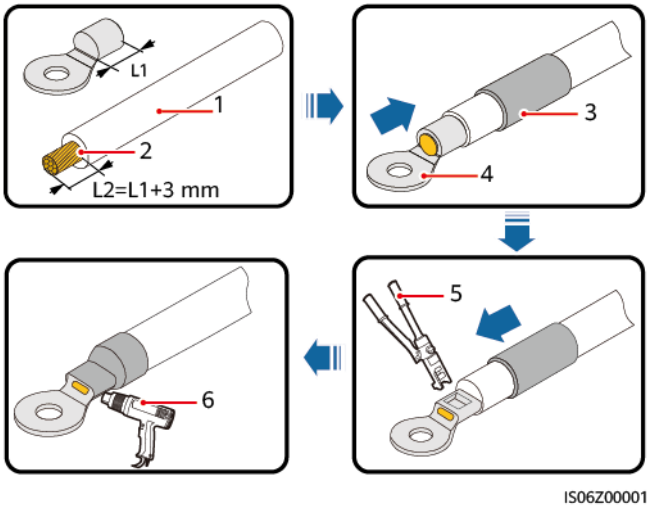

(1) Cable (2) Core wire (3) Heat shrink tubing

(4) OT terminal (5) Hydraulic pliers (6) Heat gun

Figure A-3 Crimping a DT terminal

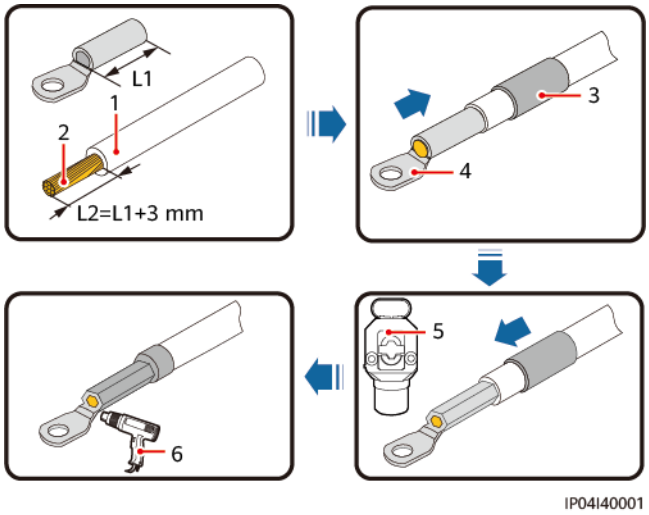

(1) Cable (2) Core wire (3) Heat shrink tubing

(4) DT terminal (5) Hydraulic pliers (6) Heat gun

 Copyright © Huawei Technologies Co., Ltd.

B Grid Codes

NOTE

The grid codes are subject to change. The listed codes are for reference only.

No.	Grid Code	Description	SUN2000-250KTL-H3	SUN2000-280KTL-H0	SUN2000-300KTL-H0	SUN2000-330KTL-H1	SUN2000-330KTL-H2	SUN2000-250KTL-H1
1	CHINA-MV800	China medium-voltage power grid	Supported	Supported	Supported	-	-	-
2	CHINA-CUSTOM-MV800	China power grid	Supported	Supported	Supported	-	-	-
3	ABNT NBR 16149-MV800	Brazil medium-voltage power grid	-	-	-	Supported	-	Supported
4	BRASIL-ANEEL-MV800	Brazil power grid	-	-	-	-	-	Supported
5	KOREA-MV800	South Korea power grid	-	-	-	Supported	-	-
6	TAIPOWER-MV800	Taiwan Power medium-voltage power grid	-	-	-	Supported	-	-

 Copyright © Huawei Technologies Co., Ltd.

No.	Grid Code	Description	SUN2000-250KTL-H3	SUN2000-280KTL-H0	SUN2000-300KTL-H0	SUN2000-330KTL-H1	SUN2000-330KTL-H2	SUN2000-250KTL-H1
7	SINGAPORE-MV800	Singapore medium-voltage power grid	-	-	-	Supported	-	-
8	AS4777-MV800	Australia medium-voltage power grid	-	-	-	Supported	-	-
9	AUSTRALIA-AS4777_A-MV800	Australia power grid	-	-	-	Supported	-	-
10	Philippines-MV800	Philippines power grid	-	-	-	Supported	-	-
11	TAI-PEA-MV800	Thailand power grid	-	-	-	Supported	-	-
12	TAI-MEA-MV800	Thailand power grid	-	-	-	Supported	-	-
13	Malaysian-MV800	Malaysia power grid	-	-	-	Supported	-	-
14	Bangladesh-MV800	Bangladesh power grid	-	-	-	Supported	-	-
15	Vietnam-MV800	Vietnam medium-voltage power grid	-	-	-	Supported	-	-
16	Cambodia-MV800	Cambodia power grid	-	-	-	Supported	-	-

 Copyright © Huawei Technologies Co., Ltd.

No.	Grid Code	Description	SUN2000-250KTL-H3	SUN2000-280KTL-H0	SUN2000-300KTL-H0	SUN2000-330KTL-H1	SUN2000-330KTL-H2	SUN2000-250KTL-H1
17	VDE-AR-N4110-MV800	Europe power grid	-	-	-	Supported	-	-
18	CEI0-21-MV800	Italy power grid	-	-	-	Supported	-	-
19	CEI0-16-MV800	Italy medium-voltage power grid	-	-	-	Supported	-	-
20	UTE C 15-712-1-MV800	France power grid	-	-	-	Supported	-	-
21	RD1699/661-MV800	Spain medium-voltage power grid	-	-	-	Supported	-	-
22	PO12.3-MV800	Spain medium-voltage power grid	-	-	-	Supported	-	-
23	NTS-MV800	Spain power grid	-	-	-	Supported	-	-
24	EN50438_IE-MV800	Ireland power grid	-	-	-	Supported	-	-
25	EN50549-MV800	Ireland power grid	-	-	-	Supported	-	-
26	IRELAND-EN50549-MV800	Ireland power grid	-	-	-	Supported	-	-
27	Northern Ireland-MV800	Northern Ireland power grid	-	-	-	Supported	-	-

 Copyright © Huawei Technologies Co., Ltd.

No.	Grid Code	Description	SUN2000-250KTL-H3	SUN2000-280KTL-H0	SUN2000-300KTL-H0	SUN2000-330KTL-H1	SUN2000-330KTL-H2	SUN2000-250KTL-H1
28	DENMARK-EN50549-MV800	Denmark power grid	-	-	-	Supported	-	-
29	C10/11-MV800	Belgium power grid	-	-	-	Supported	-	-
30	PORTUGAL-MV800	Portugal power grid	-	-	-	Supported	-	-
31	ANRE-MV800	Romania power grid	-	-	-	Supported	-	-
32	AUSTRIA-MV800	Austria power grid	-	-	-	Supported	-	-
33	AUSTRIA-HV800	Austria power grid	-	-	-	Supported	-	-
34	Israel-MV800	Israel power grid	-	-	-	Supported	-	-
35	Israel-HV800	Israel power grid	-	-	-	Supported	-	-
36	POLAND-EN50549-MV800	Poland power grid	-	-	-	Supported	-	-
37	CZECH-EN50549-MV800	Czech Republic power grid	-	-	-	Supported	-	-
38	EN50438-TR-MV800	Türkiye power grid	-	-	-	Supported	-	-
39	Macedonia-MV800	Republic of North Macedonia power grid	-	-	-	Supported	-	-

 Copyright © Huawei Technologies Co., Ltd.

No.	Grid Code	Description	SUN2000-250KTL-H3	SUN2000-280KTL-H0	SUN2000-300KTL-H0	SUN2000-330KTL-H1	SUN2000-330KTL-H2	SUN2000-250KTL-H1
40	Mexico-MV800	Mexico power grid	-	-	-	Supported	-	Supported
41	BRASIL-ANEEL-MV800	Brazil power grid	-	-	-	Supported	-	-
42	Chile-MV800	Chile power grid	-	-	-	Supported	-	-
43	GREG060-MV800	Colombia power grid	-	-	-	Supported	-	Supported
44	ARGENTINA-MV800	Argentina medium-voltage power grid	-	-	-	Supported	-	-
45	Nicaragua-MV800	Nicaragua power grid	-	-	-	Supported	-	-
46	Panama-MV800	Panama power grid	-	-	-	Supported	-	-
47	SAUDI-MV800	Saudi Arabia power grid	-	-	-	-	Supported	-
48	LEBANON-MV800	Lebanon medium-voltage power grid	-	-	-	-	Supported	-
49	Pakistan-MV800	Pakistan power grid	-	-	-	-	Supported	-
50	Oman-MV800	Oman power grid	-	-	-	-	Supported	-

 Copyright © Huawei Technologies Co., Ltd.

No.	Grid Code	Description	SUN2000-250KTL-H3	SUN2000-280KTL-H0	SUN2000-300KTL-H0	SUN2000-330KTL-H1	SUN2000-330KTL-H2	SUN2000-250KTL-H1
51	Oman-PDO-MV800	Oman power grid	-	-	-	-	Supported	-
52	Bahrain-MV800	Bahrain power grid	-	-	-	-	Supported	-
53	Kuwait-MV800	Kuwait power grid	-	-	-	-	Supported	-
54	Jordan-Transmission-MV800	Jordan power grid	-	-	-	-	Supported	-
55	Jordan-Distribution-MV800	Jordan power grid	-	-	-	-	Supported	-
56	Jordan-Transmission-HV800	Jordan high-voltage power grid	-	-	-	-	Supported	-
57	Egypt ETEC-MV800	Egypt power grid	-	-	-	-	Supported	-
58	KENYA_ETHIOPIA-MV800	Kenya low-voltage power grid and Ethiopia medium-voltage power grid	-	-	-	-	Supported	-
59	TUNISIA-MV800	Tunisia medium-voltage power grid	-	-	-	-	Supported	-
60	NRS-097-2-1-MV800	South Africa power grid	-	-	-	Supported	Supported	-

 Copyright © Huawei Technologies Co., Ltd.

No.	Grid Code	Description	SUN2000-250KTL-H3	SUN2000-280KTL-H0	SUN2000-300KTL-H0	SUN2000-330KTL-H1	SUN2000-330KTL-H2	SUN2000-250KTL-H1
61	SA_RPPs-MV800	South Africa power grid	-	-	-	Supported	Supported	-
62	ZAMBIA-MV800	Zambia medium-voltage power grid	-	-	-	-	Supported	-
63	KENYA_ETHIOPIA-MV800	Kenya low-voltage power grid and Ethiopia medium-voltage power grid	-	-	-	-	Supported	-
64	NAMIBIA_MV800	Namibia power grid	-	-	-	-	Supported	-
65	Cameroon-MV800	Cameroon medium-voltage power grid	-	-	-	-	Supported	-
66	Ghana-MV800	Ghana medium-voltage power grid	-	-	-	-	Supported	-
67	NIGERIA-MV800	Nigeria medium-voltage power grid	-	-	-	-	Supported	-
68	UZBEKISTAN-MV800	Uzbekistan power grid	-	-	-	-	Supported	-

 Copyright © Huawei Technologies Co., Ltd.

No.	Grid Code	Description	SUN2000-250KTL-H3	SUN2000-280KTL-H0	SUN2000-300KTL-H0	SUN2000-330KTL-H1	SUN2000-330KTL-H2	SUN2000-250KTL-H1
69	KAZAKHSTAN-MV800	Kazakhstan power grid	-	-	-	-	Supported	-
70	Mauritius-MV800	Mauritius power grid	-	-	-	-	Supported	-
71	IRAQ-MV800	Iraq power grid	-	-	-	-	Supported	-
72	MOROCCO-MV800	Morocco power grid	-	-	-	-	Supported	-
73	ALGERIA-MV800	Algeria power grid	-	-	-	-	Supported	-
74	FRANCE-RTE-MV800	France power grid	-	-	-	Supported	-	-
75	CHINA-GBT19964-MV800	China GB/T 19964 standard power grid	Supported	Supported	Supported	-	-	-
76	CHINA-GBT29319-MV800	China GB/T 29319 standard power grid	Supported	Supported	Supported	-	-	-
77	VDE-AR-N4130-800	Germany power grid	-	-	-	Supported	-	-
78	AZERBAIJAN-800	Azerbaijan power grid	-	-	-	-	Supported	-

 Copyright © Huawei Technologies Co., Ltd.

No.	Grid Code	Description	SUN2000-250KTL-H3	SUN2000-280KTL-H0	SUN2000-300KTL-H0	SUN2000-330KTL-H1	SUN2000-330KTL-H2	SUN2000-250KTL-H1
79	G99-TYPEB-HV-MV800	UK G99 type B medium-voltage power grid	-	-	-	Supported	Supported	-
80	G99-TYPEC-HV-MV800	UK G99 type C medium-voltage power grid	-	-	-	Supported	Supported	-
81	G99-TYPED-MV800	UK G99 type D medium-voltage power grid	-	-	-	Supported	Supported	-
82	SRI LANKA-800	Sri Lanka medium-voltage power grid	-	-	-	Supported	-	-
83	IEEE 1547-MV800	Latin America medium-voltage power grid	-	-	-	Supported	-	-
84	EN50549-MV800	Netherlands medium-voltage power grid	-	-	-	-	-	Supported
85	ITALY-A68-800	Italy medium-voltage power grid	-	-	-	Supported	-	-

 Copyright © Huawei Technologies Co., Ltd.

No.	Grid Code	Description	SUN2000-250KTL-H3	SUN2000-280KTL-H0	SUN2000-300KTL-H0	SUN2000-330KTL-H1	SUN2000-330KTL-H2	SUN2000-250KTL-H1
86	GUATEMALA-800	Guatemala medium-voltage power grid	-	-	-	Supported	-	-
87	ABUDHABI-MV800	Abu Dhabi medium-voltage power grid	-	-	-	-	Supported	-
88	SENEGAL-MV800	Senegal medium-voltage power grid	-	-	-	-	Supported	-
89	ESTONIA-800	Estonia medium-voltage power grid	-	-	-	Supported	-	-
90	LATVIA-800	Latvia medium-voltage power grid	-	-	-	Supported	-	-
91	G99/NI-TYPEA-800	Northern Ireland type A medium-voltage power grid	-	-	-	Supported	-	-
92	G99/NI-TYPEB-800	Northern Ireland type B medium-voltage power grid	-	-	-	Supported	-	-

 Copyright © Huawei Technologies Co., Ltd.

No.	Grid Code	Description	SUN2000-250KTL-H3	SUN2000-280KTL-H0	SUN2000-300KTL-H0	SUN2000-330KTL-H1	SUN2000-330KTL-H2	SUN2000-250KTL-H1
93	G99/NI-TYPEC-800	Northern Ireland type C medium-voltage power grid	-	-	-	Supported	-	-
94	G99/NI-TYPED-800	Northern Ireland type D medium-voltage power grid	-	-	-	Supported	-	-
95	AUSTRALIA-AS4777_B-800	Australia AS4777-B medium-voltage power grid	-	-	-	Supported	-	-
96	AUSTRALIA-AS4777_C-800	Australia AS4777_C medium-voltage power grid	-	-	-	Supported	-	-
97	AUSTRALIA-AS4777_NZ-800	Australia AS4777_NZ medium-voltage power grid	-	-	-	Supported	-	-
98	TAI-EGAT-800	Thailand EGAT medium-voltage power grid	-	-	-	Supported	-	-

 Copyright © Huawei Technologies Co., Ltd.

No.	Grid Code	Description	SUN2000-250KTL-H3	SUN2000-280KTL-H0	SUN2000-300KTL-H0	SUN2000-330KTL-H1	SUN2000-330KTL-H2	SUN2000-250KTL-H1
99	IEC61727-MV800	IEC 61727 medium-voltage power grid	-	-	-	Supported	Supported	-
100	IEC 61727-MV800-60HZ	IEC 61727 (60 Hz) medium-voltage power grid	-	-	-	Supported	Supported	-
101	DUBAI-MV800	Dubai medium-voltage power grid	-	-	-	-	Supported	-
102	JAMAICA-MV800	Jamaica medium-voltage power grid	-	-	-	Supported	-	-
103	AUSTRALIA-NER-MV800	Australia NER standard power grid	-	-	-	Supported	-	-
104	VDE-AR-N4120-HV800	Germany medium-voltage power grid	-	-	-	Supported	-	-
105	CHILE-PMGD-MV800	Chile PMGD medium-voltage power grid (800 V)	-	-	-	Supported	-	-
106	LITHUANIA-EN50549-MV800	Lithuania power grid	-	-	-	Supported	-	-

 Copyright © Huawei Technologies Co., Ltd.

No.	Grid Code	Description	SUN2000-250KTL-H3	SUN2000-280KTL-H0	SUN2000-300KTL-H0	SUN2000-330KTL-H1	SUN2000-330KTL-H2	SUN2000-250KTL-H1
107	INDIA-MV800	India medium-voltage power grid	-	-	-	-	Supported	-
108	CEA-MV800	India medium-voltage power grid	-	-	-	-	Supported	-
109	AUSTRIA-TYPEC-MV-800	Austria medium-voltage power grid (type C)	-	-	-	Supported	-	-
110	FRANCE-EN50549-800	France power grid	-	-	-	Supported	-	-
111	PERU-MV800	Peru power grid	-	-	-	Supported	-	-
112	EN50549-SE-MV800	Sweden power grid	-	-	-	Supported	-	-
113	Malaysian-Transmission-MV800	Malaysia medium-voltage transmission grid	-	-	-	Supported	-	-
114	URUGUAY-800	Uruguay power grid	-	-	-	Supported	-	-
115	GUYANA-800	Guyana power grid	-	-	-	Supported	-	-
116	FINLAND-VJV-TYPED-800	Finland power grid	-	-	-	Supported	-	-

 Copyright © Huawei Technologies Co., Ltd.

No.	Grid Code	Description	SUN2000-250KTL-H3	SUN2000-280KTL-H0	SUN2000-300KTL-H0	SUN2000-330KTL-H1	SUN2000-330KTL-H2	SUN2000-250KTL-H1
117	BAHAMAS-800	Bahamas power grid	-	-	-	Supported	-	-
118	SURINAME-800	Suriname power grid	-	-	-	Supported	-	-
119	POLAND-typeB-nN-800	Poland power grid	-	-	-	Supported	-	-

 Copyright © Huawei Technologies Co., Ltd.

C Resetting Passwords

Method 1: App

Step 1 Check that the AC and DC sides of the inverter are both powered on, and indicators and are steady green or blinking slowly for more than 3 minutes.

Step 2 Turn off the AC switch, set the DC SWITCH at the bottom of the inverter to OFF, and wait until all LED indicators on the inverter panel turn off.

Step 3 After the inverter is powered off, complete the following operations within 4 minutes:

1. Turn on the AC switch and wait for about 90s or until the inverter indicator blinks.
2. Turn off the AC switch and wait about 30s or until all LED indicators on the inverter panel turn off.
3. Turn on the AC switch and wait for about 90s or until the inverter indicator blinks.

Step 4 Log in to the app and reset the password within 10 minutes. (If no operation is performed within 10 minutes, all parameters of the inverter remain unchanged.)

----End

Method 2: SmartLogger3000+App

Step 1 On the **Monitoring** page of the SmartLogger, choose the inverter, choose **Running Param.** > **Feature Parameters**, and set **Safe mode** to **Enter**.

Step 2 Log in to the app and reset the password within 4 hours. (If the software restarts or no operation is performed within 4 hours, all parameters of the inverter remain unchanged.)

----End

 Copyright © Huawei Technologies Co., Ltd.

NOTICE

You are advised to reset the password in the morning or at night when the solar irradiance is low.

 Copyright © Huawei Technologies Co., Ltd.

D Contact Information

If you have any questions about this product, please contact us.

https://digitalpower.huawei.com

Path: **About Us** > **Contact Us** > **Global Service Hotlines**

To ensure faster and better services, we kindly request your assistance in providing the following information:

- Model
- Serial number (SN)
- Software version
- Alarm ID or name
- Brief description of the fault symptom

 Copyright © Huawei Technologies Co., Ltd.

NOTE

EU Representative Information: Huawei Technologies Hungary Kft.
Add.: HU-1133 Budapest, Váci út 116-118., 1. Building, 6. floor.
Email: hungary.reception@huawei.com

E Digital Power Customer Service

https://digitalpower.huawei.com/robotchat/

Copyright © Huawei Technologies Co., Ltd.

F Acronyms and Abbreviations

A

AUX.	Auxiliary

L

LED	light emitting diode

M

MBUS	monitoring bus
MPP	maximum power point
MPPT	maximum power point tracking

P

PID	potential induced degradation
PV	photovoltaic

R

RCMU	residual current monitoring unit

 Copyright © Huawei Technologies Co., Ltd.